delta inženjering

1.1	COVER PAGE OF TECHNICAL DOCUMENTATION

Project part	**Architectural project,** **.**
Client:	**JP Elektroprivreda Srbije, Carice Milice 2, Beograd,**
Facility:	**FGD Construction Project for TPP Niklola Tesla,** **Location: Obrenovac, K.P. 1934/1, K.O. Urovci**
Doc. type:	**IDR - Conceptual design**
Type of works:	**New construction**
Designer:	**delta inženjering**, Zaplanjska br. 86, 11010 Beograd – Voždovac
Designer's representative:	**JugoslavPavlović,dipl.ing.maš., director**
Sign and stamp:	DELTA INŽENJERING BEOGRAD
Responsible designer:	**Mirjana Lazić, mr.arch., dipl.ing.**
License number:	**300 4540 03**
Sign and personal stamp:	Мирјана Б. Лазић дипл. инж. арх. 300 4540 03
Doc. number:	**NTFGD-00-IDR-1.0-00-IDR-1.1**

Contract	Facility	Doc. type	Project part	Book part	Revision
NTFGD-00-IDR-1.0	**00**	**IDR**	**1**	**1**	**0**
Place and date:	**Belgrade, 2018**				

2018	0	IDR - Conceptual design		
Date:	Revision:	Project / Revisiondescription	Done by:	Approved:

Zaplanjska br. 86, 11010 Beograd – Voždovac
Telefon: +381-11-78.56.903
Faks: +381-11-31.21.788
www.deltainzenjering.rs

Activity record: 7112; Record number: 17085123; Tax ID: SR100062229, VAT No.: 386473

This document is not allowed to be used, printed or multiplied without written agreement of **delta inženjering**

1.2 PROJECT PART CONTENTS

No.	Document name	Document No.	Format	Sheet	Rev.	Date
1.1	COVER PAGE OF TECHNICAL DOCUMENTATION	NTFGD-00-IDR-1.0-00-IDR-1.1 -00	A4	1	0	
1.2	CONTENTS	NTFGD-00-IDR-1.0-00-IDR-1.1 -00	A4		0	
1.3	DECISION ON DETERMINING THE RESPONSIBLE DESIGNER	NTFGD-00-IDR-1.0-00-IDR-1.1 -00	A4	1	0	
1.4	STATEMENT OF THE RESPONSIBLE DESIGNER	NTFGD-00-IDR-1.0-00-IDR-1.1 -00	A4	1	0	
1.5	TEXTUAL DOCUMENTATION	NTFGD-00-IDR-1.0-00-IDR-1.1 -00	A4	1	0	
1.5.1	Technical description	NTFGD-00-IDR-1.0-00-IDR-1.1 -00	A4		0	
1.6.	NUMERICAL DOCUMENTATION	NTFGD-00-IDR-1.0-00-IDR-1.1 -00	A4	1	0	
1.6.1	Area calculation	NTFGD-00-IDR-1.0-00-IDR-1.1 -00	A4		0	
1.6.2	Estimated value of investment	NTFGD-00-IDR-1.0-00-IDR-1.1 -00	A4		0	
1.7.	GRAPHICAL DOCUMENTATION	NTFGD-00-IDR-1.0-00-IDR-1.1 -00	A4	1	0	
1.7.1	General layout plot plan	NTFGD-00-IDR-1.0-00-IDR-1.1 -01		1	0	
1.7.2	I PHASE OF EXECUTION BUILDINGS					
	OBJECT C18 –LIMESTONE TRUCK UNLOADING BUILDING					
1.7.2.1	Floor plan on ±0.00	NTFGD-00-IDR-1.0-00-IDR-1.1 -02		1	0	
1.7.2.2	Roof plan	NTFGD-00-IDR-1.0-00-IDR-1.1 -03		1	0	
1.7.2.3	Sections 1-1, 2-2	NTFGD-00-IDR-1.0-00-IDR-1.1 -04		1	0	
1.7.2.4	Facades	NTFGD-00-IDR-1.0-00-IDR-1.1 -03		1	0	
	OBJECT C22 –LIMESTONE STORAGE BUILDING					
1.7.2.5	Floor plan on ±0.00	NTFGD-00-IDR-1.0-00-IDR-1.1 -04		1	0	
1.7.2.6	Roof plan	NTFGD-00-IDR-1.0-00-IDR-1.1 -07		1	0	
1.7.2.7	Sections 1-1, 2-2	NTFGD-00-IDR-1.0-00-IDR-1.1 -05		1	0	
1.7.2.8	Facades	NTFGD-00-IDR-1.0-00-IDR-1.1 -06		1	0	
	OBJECT C23 –LIMESTONE AND GYPSUM ELECTRICAL BUILDING					
1.7.2.9	Floor plan on ±0.00	NTFGD-00-IDR-1.0-00-IDR-1.1 -10		1	0	
1.7.2.10	First floor plan	NTFGD-00-IDR-1.0-00-IDR-1.1 -07		1	0	
1.7.2.11	Roof plan	NTFGD-00-IDR-1.0-00-IDR-1.1 -08		1	0	

This document is not allowed to be used, printed or multiplied without written agreement of **delta inženjering**

1.2 PROJECT PART CONTENTS

No.	Document name	Document No.	Format	Sheet	Rev.	Date
1.7.2.12	Sections 1-1, 2-2	NTFGD-00-IDR-1.0-00-IDR-1.1 -09		1	0	
1.7.2.13	Facades A,B	NTFGD-00-IDR-1.0-00-IDR-1.1 -10		1	0	
1.7.2.14	Facades C,D	NTFGD-00-IDR-1.0-00-IDR-1.1 -11		1	0	
	OBJECT C24 –LIMESTONE MILL BUILDING					
1.7.2.15	Floor plan on ±0.00	NTFGD-00-IDR-1.0-00-IDR-1.1 -16		1	0	
1.7.2.16	Floor plan on +11.00	NTFGD-00-IDR-1.0-00-IDR-1.1 -12		1	0	
1.7.2.17	Floor plan on +18.00	NTFGD-00-IDR-1.0-00-IDR-1.1 -13		1	0	
1.7.2.18	Roof plan	NTFGD-00-IDR-1.0-00-IDR-1.1 -14		1	0	
1.7.2.19	Sections 1-1, 2-2	NTFGD-00-IDR-1.0-00-IDR-1.1 -15		1	0	
1.7.2.20	Facades A,B,C,D	NTFGD-00-IDR-1.0-00-IDR-1.1 -16		1	0	
	OBJECT C29.1,29.2 –TRUCK SCALE 1,2					
1.7.2.21	Form work of foundation	NTFGD-00-IDR-1.0-00-IDR-1.1 -22		1	0	
	OBJECT C30 –GYPSUM, STORAGE SYLO					
1.7.2.22	Floor plan on ±0.00, Floor plan on +12.80	NTFGD-00-IDR-1.0-00-IDR-1.1 -17		1	0	
1.7.2.23	Floor plan on +33.50, Floor plan on +40.00	NTFGD-00-IDR-1.0-00-IDR-1.1 -18		1	0	
1.7.2.24	Roof plan	NTFGD-00-IDR-1.0-00-IDR-1.1 -19		1	0	
1.7.2.25	Sections 1-1, 2-2	NTFGD-00-IDR-1.0-00-IDR-1.1 -20		1	0	
1.7.2.26	Facades	NTFGD-00-IDR-1.0-00-IDR-1.1 -21		1	0	
	OBJECT 35- GATE HOUSE					
1.7.2.27	Floor plan on ±0.00, Roof plan	NTFGD-00-IDR-1.0-00-IDR-1.1 -22		1	0	
1.7.2.28	Sections 1-1, 2-2	NTFGD-00-IDR-1.0-00-IDR-1.1 -23		1	0	
1.7.2.29	Facades A,B	NTFGD-00-IDR-1.0-00-IDR-1.1 -24		1	0	
1.7.2.30	Facades C,D	NTFGD-00-IDR-1.0-00-IDR-1.1 -25		1	0	
	OBJECT C36 - COMPRESSOR STATION					
1.7.2.31	Floor plan on ±0.00	NTFGD-00-IDR-1.0-00-IDR-1.1 -26		1	0	
1.7.2.32	Roof plan	NTFGD-00-IDR-1.0-00-IDR-1.1 -27		1	0	
1.7.2.33	Sections 1-1, 2-2	NTFGD-00-IDR-1.0-00-IDR-1.1 -34		1	0	
1.7.2.34	Facades	NTFGD-00-IDR-1.0-00-IDR-1.1 -35		1	0	
	FACILITY C39 –LIMESTONE RAILWAY UNLOADING					
1.7.2.35	Floor plan on ±0.00	NTFGD-00-IDR-1.0-00-IDR-1.1 -36		1	0	

This document is not allowed to be used, printed or multiplied without written agreement of **delta inženjering**

1.2 PROJECT PART CONTENTS

No.	Document name	Document No.	Format	Sheet	Rev.	Date
1.7.2.36	Roof plan	NTFGD-00-IDR-1.0-00-IDR-1.1 -37		1	0	
1.7.2.37	Sections 1-1, 2-2	NTFGD-00-IDR-1.0-00-IDR-1.1 -38		1	0	
1.7.2.38	Facades	NTFGD-00-IDR-1.0-00-IDR-1.1 -39		1	0	
1.7.3	II PHASE OF EXECUTION BUILDINGS					
	OBJECT C1 - 01 ASORBER 1HTD					
1.7.3.1	Floor plan on ±0.00, Sections, Facades	NTFGD-00-IDR-1.0-00-IDR-1.1 -40		1	0	
	OBJECT C2 - 02ASORBER 2HTD					
1.7.3.2	Floor plan on ±0.00, Sections, Facades	NTFGD-00-IDR-1.0-00-IDR-1.1 -41		1	0	
	OBJECT C3-1HTD –RECIRCULATION PUMP BUILDING 1HTD-1					
1.7.3.3	Floor plans	NTFGD-00-IDR-1.0-00-IDR-1.1 -42		1	0	
1.7.3.4	Roof plan	NTFGD-00-IDR-1.0-00-IDR-1.1 -43		1	0	
1.7.3.5	Sections 1-1, 2-2	NTFGD-00-IDR-1.0-00-IDR-1.1 -44		1	0	
1.7.3.6	Facades	NTFGD-00-IDR-1.0-00-IDR-1.1 -45		1	0	
	C4-1HTD BUILDING - RECIRCULATION PUMP BUILDING2HTD-2					
1.7.3.7	Floor plans	NTFGD-00-IDR-1.0-00-IDR-1.1 -46		1	0	
1.7.3.8	Roof plan	NTFGD-00-IDR-1.0-00-IDR-1.1 -47		1	0	
1.7.3.9	Sections 1-1, 2-2	NTFGD-00-IDR-1.0-00-IDR-1.1 -48		1	0	
1.7.3.10	Facades	NTFGD-00-IDR-1.0-00-IDR-1.1 -49		1	0	
	OBJECT C3-2 HTD-BUILDING RECYCLING PUMPS 2HTD-1					
1.7.3.11	Floor plans	NTFGD-00-IDR-1.0-00-IDR-1.1 -50		1	0	
1.7.3.12	Roof plan	NTFGD-00-IDR-1.0-00-IDR-1.1 -51		1	0	
1.7.3.13	Sections 1-1, 2-2	NTFGD-00-IDR-1.0-00-IDR-1.1 -52		1	0	
1.7.3.14	Facades	NTFGD-00-IDR-1.0-00-IDR-1.1 -53		1	0	
	OBJECT C4-2HTD –RECIRCULATION PUMP AND OXIDATION AIR BLOWER 2HTD -2					
1.7.3.15	Floor plans	NTFGD-00-IDR-1.0-00-IDR-1.1 -54		1	0	
1.7.3.16	Roof plan	NTFGD-00-IDR-1.0-00-IDR-1.1 -55		1	0	
1.7.3.17	Sections 1-1, 2-2	NTFGD-00-IDR-1.0-00-IDR-1.1 -56		1	0	
1.7.3.18	Facades	NTFGD-00-IDR-1.0-00-IDR-1.1 -57		1	0	

This document is not allowed to be used, printed or multiplied without written agreement of **delta inženjering**

1.2 PROJECT PART CONTENTS

No.	Document name	Document No.	Format	Sheet	Rev.	Date
	BUILDING C5–FGD CONTROL-ELECTRICAL BUILDING					
1.7.3.19	Basement plan	NTFGD-00-IDR-1.0-00-IDR-1.1 -58		1	0	
1.7.3.20	Floor plan on ±0.00, First Floor plan	NTFGD-00-IDR-1.0-00-IDR-1.1 -59		1	0	
1.7.3.21	Roof plan	NTFGD-00-IDR-1.0-00-IDR-1.1 -60		1	0	
1.7.3.22	Sections 1-1, 2-2	NTFGD-00-IDR-1.0-00-IDR-1.1 -61		1	0	
1.7.3.24	Facades A,B	NTFGD-00-IDR-1.0-00-IDR-1.1 -62		1	0	
1.7.3.25	Facades C,D	NTFGD-00-IDR-1.0-00-IDR-1.1 -63		1	0	
	BUILDING C6-1 HTD- OXIDATION AIR BLOWER BUILDING					
1.7.3.26	Floor plans	NTFGD-00-IDR-1.0-00-IDR-1.1 -64		1	0	
1.7.3.27	Roof plan	NTFGD-00-IDR-1.0-00-IDR-1.1 -65		1	0	
1.7.3.28	Sections 1-1, 2-2	NTFGD-00-IDR-1.0-00-IDR-1.1 -66		1	0	
1.7.3.29	Facades	NTFGD-00-IDR-1.0-00-IDR-1.1 -67		1	0	
	BUILDING C7 –EMERGENCY DIESEL GENERATOR					
1.7.3.30	Floor plan on ±0.00	NTFGD-00-IDR-1.0-00-IDR-1.1 -68		1	0	
1.7.3.31	Ceiling plan	NTFGD-00-IDR-1.0-00-IDR-1.1 -69		1	0	
1.7.3.32	Roof plan	NTFGD-00-IDR-1.0-00-IDR-1.1 -70		1	0	
1.7.3.33	Sections 1-1, 2-2,3-3	NTFGD-00-IDR-1.0-00-IDR-1.1 -71		1	0	
1.7.3.34	Facades	NTFGD-00-IDR-1.0-00-IDR-1.1 -72		1	0	
	BUILDING C10-2HTD –ABSORBER DRAIN PIT					
1.7.3.35	Form work of drain pit	NTFGD-00-IDR-1.0-00-IDR-1.1 -73		1	0	
	C37 BUILDING –GYPSUM SLURRY DISPOSAL SYSTEM TANK					
1.7.3.36	Arrangement of gypsum slurry disposed system tank area	NTFGD-00-IDR-1.0-00-IDR-1.1 -74		1	0	

This document is not allowed to be used, printed or multiplied without written agreement of **delta inženjering**

1.3 DENOMINATION OF RESPONSIBLE DESIGNER

According to the Article 128a of Law on Planning and Construction (Official Gazette of RS, no. 72/09, 81/09-correction 64/10-decision US, 24/11 and 121/12, 42/13 decision US, 50/2013 – decision US, 98/2013 – decision US, 132/14 and 145/14) and regulations of the Rulebook on content, manner and process of making and conducting of technical documentation control according to class and purpose of the facility (Official Gazette of RS, no. 23/2015, 77/2015, 58/2016, 96/2016 and 67/2017) as:

RESPONSIBLE DESIGNER

For preparation of technical documentation

Project part	**Architectural project,** **.**
Facility:	**FGD Construction Project for TPP Niklola Tesla,** **Location: Obrenovac, K.P. 1934/1, K.O. Urovci**
Doc. type:	**IDR - Conceptual design**
Type of works:	**New construction**

is appointed by:

Responsible designer:	**Mirjana Lazić, mr.arch.**
License number:	**300 4540 03**

Designer:	**Delta inženjering**, Zaplanjska br. 86, 11010 Beograd – Voždovac
Designer's representative:	**Jugoslav Pavlović,dipl.ing.maš., director**
Sign and stamp:	DELTA INŽENJERING BEOGRAD PREDUZEĆE ZA KONSALTING, PROJEKTOVANJE I INŽENJERING DOO
Doc. number:	**NTFGD-00-IDR-1.0-00-IDR-1.1**
Place and date:	**Belgrade, 2018**

1.4 DECLARATION OF RESPONSIBLE DESIGNER

Responsible designer for the preparation of technical documentation:

Project part	**Architectural project, .**
Facility:	**FGD Construction Project for TPP Niklola Tesla, Location: Obrenovac, K.P. 1934/1, K.O. Urovci**
Doc. type:	**IDR - Conceptual design**
Type of works:	**New construction**

Responsible designer:	**Mirjana Lazić, mr.arch., dipl.ing.**
License number:	**300 4540 03**

I DECLARE

- that the project is entirely in compliance with: other technical documentation for the facility
- that the project was made in accordance with the Law on planning and construction, regulations, standards and norms in the field of construction and rules of the profession;
- that during the project preparation are complied all the prescribed and defined measures and recommendations for meeting the essential requirements for the facility and that the project is prepared in accordance with the measures and recommendations by which is proven the fulfillment of basic requirements.

Responsible designer:	**Mirjana Lazić, mr.arch., dipl.ing.**
License number:	**300 4540 03**
Sign and personal stamp:	
Doc. number:	**NTFGD-00-IDR-1.0-00-IDR-1.1**
Place and date:	**Belgrade, 2018**

1.5 TEXTUAL PART

LOCATION AND DISPOSITION

The largest thermal power plant in Serbia, with six blocks of total installed capacity of 1,650 MW, TE Nikola Tesla, TENT A, is located on the right bank of the Sava River, 40km upstream from Belgrade, near Obrenovac and is the largest single electricity producer in the Serbian power system.
In addition to the production of electricity, this thermal power plant supplies thermal energy for heating the facilities in Obrenovac. The thermal power plant "Nikola Tesla A" is connected with all the major centers in the country by land and railway roads, as well as the waterways.
The subject construction is planned on the part of the cadastral plot K.P.1934 K.O.Urovci

INTRODUCTORY EXPLANATION AND PROJECT OBJECTIVE

The first block of TPP Nikola Tesla, TENT A, with a power of 210 MW, was put into operation on March 7, 1970. Six months later it was joined by the block A2 of the same power. They were, then, the most economical blocks. The construction was continued after five years, so by the end of 1979 EPS was strengthened with another four blocks of 305 + 3x308.5 MW, and TENT A reached the power of the country's largest energy facility.

All TENT A blocks emit sulfur dioxide (SO_2) in significant quantities, which exceed emission limit values determined by domestic and EU regulations.
Following the adoption of the Environmental Protection Laws, which came into force at the end of 2004, and the Law on Ratification of the Treaty on the Establishment of the Energy Community of South Eastern Europe, ElektroprivredaSrbije (EPS) has begun a series of activities in order to fulfill the obligation to harmonize the operation of thermal power plants with requirements of EU regulations regarding air protection.

The project envisages the construction of flue gas desulphurization facilities for blocks A3, A4, A5 and A6 . Blocks A1 and A2 are omitted because they will be disconnected from use due to end-of-life.
On blocks A3, A4, A5 and A6, the flue gas desulphurization technology will be applied with a wet lime method, using limestone as a sorbent. As a by-product, gypsum will be obtained, which can be used in construction. The flue gas desulphurization technology with wet limestone process generally includes the following technological operations:

- Smoke gases are fed into the absorber after the electrostatic filter with the aid of a fan (BUF-bust up fan);
- For the desulphurization process, water is supplied to the absorber by the pump, then a suspension of fine limestone, wet-milled in a mill with balls, and the necessary amount of air that provides oxygen for the reaction to unfold;
- In the reaction of limestone, water, oxygen and SO_2 from flue gases, gypsum ($CaSO_4 x_2 H_2O$) and CO_2 are obtained and gypsum is going from the absorber to the process of thickening and filtering, or thickening and then to the depositing with ash from TENT A;
- The purified flue gas is discharged from the absorber, through a wet chimney into the environment;

For gypsum obtained in the absorber in reaction with limestone suspension, the possibility is also to be dispatched to the ash dump, after thickening to a pulp density of 50% of the solid phase. Such thick pulp is then shipped with ash and clay to the ash dump. The position of this plant is marked with (C37). The location of this plant (C37) is north of the absorber 01, near the coal depot.

BASIC DATA ON FACILITIES

The facility for desulphurization of flue gases by wet procedure with limestone in TPP Nikola Tesla, TENT A, is a complex connected to the existing flue gas system of the thermal power plant and all other auxiliary systems. It consists of two physically separated, and technologically independent parts that would run in two phases:

I PHASE OF EXECUTION-SYSTEM FOR PROCESSING LIMESTONE AND GIPSYM

The objects that are the subject of the first phase are in the function of delivery, storage and preparation (milling) of the limestone necessary for the desulphurization process itself, as well as in the function of storage of the products of the desulphurization process (hydrocarbons of the gypsum) intended for further placement on the market.

II PERFORMANCE PHASE - ABSORBER SYSTEM

The objects that are the subject of the second phase are intended for the desulphurization process itself(absorbers) or are objects in the function of a given process or in the function of transporting both flue gases, as well as the limestone, gypsum and all necessary installations. Within this phase, there are also objects intended for the storage of the gypsum plaster, which is not intended for placing on the market.

URBANISTIC PARAMETERS

Based on Location Information no. 350-01-for KP 1934 KO Urovci, issued on the basis of the General Regulation Plan for the facilities of the "Nikola Tesla A" thermal power plant and its associated landfill (Official Gazette of the City of Belgrade No. 59/2008), the construction index 2.2 and occupancy rate 70% is permitted.

PARCEL AREA:
According to the list of real estate No.697 for KP 1934 KO Urovci, the total area of the parcel is 59 ha 09a 10m2.

AREA OF EXISTING PARCEL OBJECTS:
SURFACE OF THE HORIZONTAL PROJECTION OF OBJECTS 88 550m2
OCCUPANCY RATE: 14.98%
BRGP OFEXISTING OBJECTS: -
CONSTRUCTION INDEX: -

AREA OF FACILITIES DESIGNED FOR DESTRUCTION
TOTAL GROSS SURFACE - BRGP (construction)
AREA OF THE HORIZONTAL PROJECTION OF OBJECTS (occupancy):

AREA OF NEWLY-PROJECTED OBJECTS:
SURFACE OF THE HORIZONTAL PROJECTION OF OBJECTS 16 003,07m²
OCCUPANCY RATE: 2.71%
TOTAL GROSS SURFACE - BRGP 19 287.60 m²
CONSTRUCTION INDEX: 0.03

The common area of the existing objects that are retained and the newly designed objects is far below the allowed index of occupancy and occupancy.

WATER AND SEWIGE INSTALATION

STAGE 1 – LIMESTONE AND GYPSUM AREA

The objects that are the subject of stage 1 are for the purpose of transport, storage and preparation (grinding) of limestone necessary for the process of desulphurization, as well as the facilities for storage of the desulphurization process products(gypsum slurry) assigned to market sale.

Withn this stage, the following hydrotechnical installations are to be constructed:

- Firefighting water system,
- Potable water system,
- Sanitary sewerage system and
- Storm drainage system.

Firefifhting water network for fire extinguishing outside buildings will be carried as a loopednetwork, according to existing Serbian regulations in thisarea. The new network will be connected to the existing firefighting water network of the power plant complex, in the manhole located on the north side of the stage area. The new pipline route will be along the route of the new service road for this area. Polyethilene pipes are proposed for the firefighting water network sized according to calculations, with the installation of six new above ground fire hydrants DN80 mm.In the immidiate vicinityof each of the hydrants firefighting cabinets for keeping fire hoses and other firefighting equipment wil be placed.
Connections for firefighting water supply of firefighting installations inside each buildingwill be carried out to the firefifhting water network outside buildings

New potable water network is proposed for potable water supply of the sanitary appliances insidethe buildingsC23 – Limestone and gypsum electrical buildingand C35 – Gatehouse. The network will be connected to the existing water supply network of the power plant complex.Supply pipeline to the stage 1 area will be laid in the same trench as the firefighting water supply pipeline, and the route of the supply network outside buildings will be parallel to new roads. Polyethilene pipes are proposed for the supply pipeline to the stage 1 area, as well as the supply network outside buildings sized according to calculations.
Potable water pipe network inside buildingsis proposed for the buildings C23 – Limestone and gypsum electrical buildingand C35 – Gatehousefor water supply of sanitary appliances in sanitary facilities in the buildings.

Sewerage systems inside, as well as outside the buildings are proposed for the removal of wastewater from sanitary appliances in buildings C23 – Limestone and gypsum electrical buildingand C35 – Gatehouse. Wastewater from the buildings will be removed by the shortest paths and discharged into the nearest manhole outside the buildings. Revision manholes will be placed in all points of sewer lines route deflection, horizontally or verticaly. Sewer lines route will be along the newly designed roads inside the stage 1 area and the point of connection to the existing sewerage system of the power plant complex is proposed to bein the nearest existing manhole, north of the stage 1 objects.

New storm water drainage system is proposed for storm water collection and removal from newly designed roads, pavements, plateaus and roofs of the buildings inside stage 1 area.In accordance with the planned roads horizontal and vertical routes, a required number of stormwater grate inlets will be locatedin all the spots where necessary to interceptsurface storm water and convey it into the storm drainage system.Storm water will be collected and conveyed outside the limits of stage 1 area.Storm water from the existing ditch along the railway line will be connected to new storm drainage system since the existing ditch outlet will be demolished.
Primary treatment of storm drainage water is proposed, ie. settling, and mineral oil removal in oil separator. Storm drainage water, after the treatment, will be discharged into existing canal for drainage of surface water from coal storage area.

STAGE 2 – ABSORBERS AREA

Objects that are to be constructedin stage 2are for the purpose of the desulphurization process (absorbers) or are objects related to the process or related to the flue gastransport orlimestone, gypsum transport as well as all necessary installations. Within this stage there are also objects intended for the purpose of storage the gypsum slurry that is not assigned to market sale.

Within this stage the following hydrotechnical installations are to be constructed:

- Firefighting water system,

- Potable water system,
- Sanitary sewerage system and
- Storm drainage system.

Within this phase, the construction of a large number of objects, which are located according to the technological function, is proposed. This will cause that some sections of the existing hydrotechnical installations - firefighting water network, potable water lines, sanitary sewers and storm drains - would have to be demolished and new ones build as a replacement for them. This relocation of the parts of the existing hydrotechnical installations is provided in a separate part of the project, together with thelayout where the sections of the hydrotechnical installations proposed for demolishion are shown. Newlydesigned relocated hydrotechnical installations will be located taking into account the new designed roads, i.e. approximately parallel to them, as well as the location of newly designed buildings and they will enable normal functioning of new objects as well as the existing part of the complex that is not covered by these works.

Firefighting water network for extinguishing fires outside buildings in stage2, apart from the relocation of existing sections that wil be demolished due to the construction of stage2 facilities, also includes the construction of a new loop that will provide the necessary water for fire extinguishing atstage2 location. The route of newlydesigned loop will be along the newly designed road. It is proposed that four new hydrants will be installed, with firefighting cabinets for keeping fire hoses and other firefighting equipment. The newly designed loopwill be connected to the existing or relocated firefighting water network of TENT A.Besides the firefighting hydrants outside buildings, it is proposed that the fire extinguishing water network will be installedin the newly designed objects, according to the existing regulations in this area.

Potable water line is proposed to be supplied only to the building C5 - The main electro-commanding building for water supply of sanitary facilities in the building. The potable water line connection for the buildingwill be to the existing potable water network in the TENT A complex, on the section of the pipeline that isnearest to the C5 building.

The pumping station for sewage, as well as sections of the main sewage collector upstream and downstream of it are located at the location of newly designed objects of the stage 2 and will have to be demolished and replaced with newly designed facilities that will enable the normal operation of the entire system in the complex. The new position of sewage pumping station as well as the routes of relocatedsewers will be proposed in accordance with the route of the newly designed road, as well as the location of newly designed facilities. The main sewage collector route is designed approximately parallel to the new road.
Sewage installations inside building are only proposed in building C5 - Main Electro-Command Building. The sewerageoutlet from the building will be connected to the relocated sewerage system at the nearest manhole.

Storm drainage outside buildings in stage 2 area, consists of relocation of sections of the existing drainage system that will be demolished because of the construction of new objects in stage 2 and building of a new storm drainage that will replace demolished sections of the drainage system and collect and convey storm water fromthe surface of newly designed roads, sidewalks, plateaus and roofs of buildings at stage 2 area. The route of the newly designed main collector will be next to the newly projected road, approximately parallel to the sewer route. The relocated or designed storm drainagewill be discharged into the existing storm drainage system in the TENT A complex downstream from the location of the stage 2facilities.

EXTERNAL ORGANIZATION

The plant will be connected to the existing internal and public transport infrastructure and to all necessary installation lines.
New traffic facilities are connected to existing internal roads within the thermal power plant complex. The connection to the public transport infrastructure is foreseen through the existing internal network of the thermal power plant and has not been specifically addressed in this project. All new traffic objects will be asphalted. All manipulation surfaces are dimensioned for a truck with a trailer.

ELECTRICAL INSTALATION

The power supply of the flue gas desulphurization plant on the TENT A thermal power plant is fully anticipated from TENT A. own consumption.

The project for the installation of flue gas desulphurization plants includes:

- Installations of power supply and electromotor distribution
- Lighting and low voltage installations (sockets ...)
- Grounding and lightning protection
- Light aircraft signaling (for high-rise buildings)

Projects encompass all technological units envisaged by the technology project of the technology carrier.

The power supply of the desulphurization plant is envisaged with 4 new oil transformers 15/6 kV, the corresponding power required to satisfy the consumption of the carrier of the technology. Transformers will feed 15kV busbars from existing generating busbars. From a secondary 6kV side, the transformers are connected by 6kV cables to the diversified 6kV power supply unit.
Based on the needs of consumption, the model of the network and the distribution of consumers through the 6kV diversity bars is defined.

With the new oil transformer 15 / 6kV, a 6kV distribution plant is located, which is located in the control building (electrical installation) for the part of the plant that refers to the absorbers. The plant is equipped with the necessary number of feeder, transformer, measuring and coupling cells, which are intended to supply the flue gas desulphurization plant as well as the lime and plaster manipulation plant.

From the 6kV switchgear, 5 new dry transformers 6 / 0.4kV of the corresponding power are required to satisfy the consumption of the technology carrier, one group of these transformers is designed to power the desulphurization plant, and the other group for the facilities for lime and gypsum manipulation.
0,4 kV plants are cassette type, and are loaded with dry transformers 6 / 0,4 kV
A 110V DC plant for signaling and protection management is also provided.
One-way power supply includes two sets of battery chargers, two sets of DC distribution (panels), inverters and static switch
Batteries are serial connected so they have a capacity of 10 hours without charging. The discharge capacity should be sufficient to supply consumers for 10 hours.
Chargers should be 400V, three-phase, 50Hz so that batteries are designed as a common system. The type of charger must be SCR.
Continuous power supply (UPS) should provide continuous AC voltage regulation (CVCF) and should contain CVCF panel and batteries.
Inverters must have voltage regulation (transient response) which must not exceed stable consumption + 10% to -10% of rated voltage. The output voltage must be adjustable from + 5% to -5%.
The static switch is used to automatically switch between alternating divisions in the event of power failure.
It is planned to supply priority consumers in case of network voltage failure. In accordance with the list of priority consumers for their power supply in the event of a network failure, a diesel engine and a system of safety

The installation of the 15 / 6kV transformer is envisaged next to the main block transformers below in addition to the transformers of their own consumption and their primary ones are connected to the existing busbars by the 15kV bus.
Connection of a transformer with a 6kV plant located in the control building-electrical space for the part of the plant related to the absorbers is realized by a 6kV cable line.
From the command of the building of the absorber to the transformer at the command building for lime and gypsum installation, a 6kV cable line is planned.
For the block part of the plant (absorbers), a command building is planned to accommodate all electrical equipment and equipment for control, monitoring and management. Three levels of the building are planned. The basement is mostly

provided for the supply of cables to the plant, and in the basement part of the basement there are UPS batteries. On the ground floor are 0.4 kV dry transformers, 6 kV installations, 0.4 kV plant, 110V JSS plant, workshops and warehouse of materials. On the floor of the building is a command hall, DCS cabinets, laboratories and rooms for the needs of the workers.
For the installation of electrical equipment, for the lime and gypsum installations, another command building is envisaged. On the ground floor there are 0,4 kV dry transformers, 0,4 kV plant, and on the first floor there is a command room, DCS cabinets, and rooms for the needs of the workers.
From the command buildings, the cables lead to equipment in operation with new overhead cable lines, which are mostly placed on the pipe bridges in the plant.

Lighting

Installation of working, auxiliary and evacuation lighting is foreseen for: interior spaces, street lighting, lighting of galleries, passages, space around equipment as well as airborne lighting, light aircraft signaling for high buildings.

There is also a low-voltage socket installation for: interior spaces, exterior spaces, galleries, passages, equipment spaces including universal power cabinets
Distribution cabinets of lighting and sockets, main and secondary, distribution cabinets for airborne lighting and structures for carrying pipelines and cables will be defined.

DESCRIPTION OF THE OBJECT

I PHASE OF EXECUTION - SYSTEM FOR PROCESSING LIMESTONE AND GYPSUM

OBJECT C18 –LIMESTONE TRUCK UNLOADING BUILDING

General characteristics:

The base of the building is a gross area of 478.47m 2 . The height of the object is determined and adapted according to the technological needs, it amounts to 10.95 m from the ground level. The roof is two slopes with the inclination of 15%.

Construction of the building:

The bearing structure of the building is steel skeleton. The building is based on the foundation slab and relies mostly on the walls of the C19-transit tunnel between the station and the wagon. Bearing poles are also profiles, which are interconnected by horizontal steel beams.

Materialization of the building:

The roof
Covering of the roof is TR zinc plated plasticized steel sheet d = 0.8mm, and the thickness of the sheet at the upper and lower outlet gutters is d = 1.2mm.

Walls
The coating of the façade is performed by TR zincplated placticizedsteel sheet steel d = 0.8mm. General characteristics:
Construction of the building:
Materialization of the building:

OBJECT C22 –LIMESTONE STORAGE BUILDING

General characteristics:

The building has a gross floor area of 1302.2 m2, net floor area of 1287,8m2, the surface of the horizontal projection of the roof is 1117.0 m2. The height of the building is determined and adapted according to the technological needs and the minimum height of the roof is 18,23 m , and the maximum height of the roof of the building is 25,1 m . On the ground floor of the building, height + -0,00m, there are three mills on separate foundations .

Construction of the building:

The bearing structure of the building is steel skeleton. The building is based on the foundations, and the mills are placed on base plates. Bearing poles are also profiles, which are connected at the levels + 11,0m and + 18,0m with horizontal steel beams. At these levels the floor is made of metal floor slab with concrete fill.
On the ground floor of the building the industrial floor is made from reinforced fine-grained concrete, reinforced with reinforcement mesh and finished with monolithic quartz sanding. The surface is operated on with a rotary machine, and the joints are operated on at the prescribed distance.

Materialization of the building:

Roof: Roof sandwich panels with filling of mineral wool of thickness d = 100mm are installed on the building, and duplex coated with galvanized plasticized steel sheet d = 0.8mm, and the thickness of the sheet at the upper and lower outlet gutters is d = 1.2mm. The panel must have fire resistance specified by the fire protection project.

Walls: Facade walls are sandwich panels with thickness d = 10cm, with support grid. Sandwich panels have a zinc plasticized coated sheet metal d = 0.8mm and filling (thermal insulation) of mineral wool of thickness d = 100mm.
Locksmith: The external locksmith is from anodized aluminum profiles with triple thermopan glass. Lockable fixed windows are installed with glazing with laminated glass d = 6mm. . The windows are 400x100cm. There are industrial doors of 200x220cm in size, with pedestrian doors in everything according to the scheme of the locksmith. Industrial segmental doors of size 700x600cm are installed, on the part where the mills are located, in all according to the scheme of the locksmith .
:

OBJECT C23 –LIMESTONE AND GYPSUM ELECTRICAL BUILDING

General characteristics:

The building is OF a gross area of 259.56 m^2. Within the building there is a concrete plateau measuring 9.00 mx 3.45 m, with a total net area of 29.70 m^2 , in front of the main entrance. The height of the building is 8.12m. The ground height of the object is 8.42m.
The net surface of the building is 211.03m^2 , the surface of the horizontal roof projection is 260.89m^2 .

Construction of the building:

The building is of a reinforced concrete frame construction. Pillars and beams are fully according to the static calculation. The ceilings are reinforced concrete. The walls are from the block d = 25cm. The building is based on the base plate. The roof is covered with concrete slabs with the inclination of 3%.

Materialization of the building:

Finishing of the floorboard is a concrete with a reinforcement of the tread surface with quartz sanding and a color mass of choosing. In the electrical room there is a double floor with zinc insulated steel sheet, with load of 500kg / m^2 with a vinyl plate finish.
In the floors, depending on the purpose of the rooms, the floor layers will be made with cement screed, waterproofing and thermal insulation fromstyrofoam.

Flat roof layers: vapor barrier, thermal insulation, styrofoam d = 22cm, falling layer = 4-18.5cm, coating bitulite and 2x bituminous strip, geotextile 100gr / m ^{2} .

The walls are made of slate block, of thickness d = 25cm. The partition walls on the floor are from clay block d = 20cm. Interior coating of walls and ceilings is a prolonged mortar with the patting and painting of walls and ceilings with semi-dispersion paint in two layers. The facade is thermally insulated with half-hard mineral wool plates d = 15 cm, finishing is made of panels of zinc plasticized sheet d = 0.8cm.

The windows will be made of aluminum anodized profiles with thermal break, glazed with appropriate glass, laminated withd = 6mm. Fire doors, with fire resistance according to the project , are in made in two different sizes, in total 3 pcs. The entrance door is thermo-insulated locksmith, double-winged, measuring 2060 / 2200mm with a suitable fitting, lock and automatic closing.

An inner staircase of steel profile is planned, with the appropriate railings and painting.

Through the channel inside the building we have cover panels according to the project, based on the L profile.

OBJECT C24 –LIMESTONE MILL BUILDING

General characteristics:

The building is gross area of ground floor 1302.2 m2, the net surface of the ground floor is 1287.8 m2, the surface of the horizontal roof projection is 1117.0 m2. The height of the building is determined and adapted to the technological needs and the minimum height of the roof is 18,23 m, and the maximum height of the roof of the building is 25,1 m. On the ground floor of the building, the angle + -0,00m, there are three mills on separate foundations. The base on the angle + 11.0m is 454.8m2, where there are devices for regulation of the limestone reservoir. At the base level of + 18,0m of surface 282,6m2, there are hydrocyclones of limestone. Three reservoirs of limestone suspension penetrate through the roof and exit outside the building, up to a height of 34.4m. All levels of the building connect two single-sided stairways with platforms along the walls in axis A and E.

Preparation of limestone suspension is carried out in the grinding plant (C24), in which wet milling of limestone in milled balls takes place with the control of finishing quality of grinding. After dilution with water, the pulp is graded in a hydrocyclone battery, where a limestone suspension is obtained as a hydrocyclone overflow, which is carried to the limestone suspension reservoir. From this reservoir, the absorber is fed with a fresh suspension.

Construction of the building:

The bearing structure of the building is steel skeleton. The building is based on the foundations of the male, and the mills are placed on the base slabs. Bearing poles are profiles, which are connected at the levels + 11,0m and + 18,0m with horizontal steel beams and ribs. At these levels the floor is made of metal floor slab with concrete fill.

On the ground floor of the building is made an industrial floor made of reinforced fine-grained concrete, reinforced with reinforcement mesh and finished with monolithic quartz sanding. The surface is machined with a rotary machine, and the joints are operated at the prescribed distance.

Materialization of the building:

Roof: Roof sandwich panels with filling of mineral wool of thickness d = 100mm are installed on the building, and duplex coated with galvanized plastic coated steel sheet d = 0.8mm, and the thickness of the sheet at the upper and lower outlet gutters is d = 1.2mm. The panel must have fire resistance specified by a fire protection project.

Walls: Facade walls are sandwich panels with thickness d = 10cm, with support grid. Sandwich panels have a lined plastic coated sheet metal d = 0.8mm and filling (thermal insulation) of mineral wool of thickness d = 100mm. Façade sandwich panel with all edges on the edges and around the opening of the windows and doors. The pan must have fire resistance specified by the project against fire protection.

Locksmith: The external locksmith is provided with anodized aluminum profiles with triple thermopan glass. Lockable fixed windows are installed with glazing with laminated glass d = 6mm. The windows are mined and colorful colors of your choice. The windows are 400x100cm. There are industrial doors of 200x220cm in size, with pedestrian doors in everything according to the scheme of the locksmith. Industrial segmental doors of size 700x600cm are installed, on the part where the mills are located, in all according to the scheme of the locksmith.

OBJECT C29.1 –TRUCK SCALE 1

General characteristics:

The building has a gross area of 64.12 m^2, a net 54.84 m^2, the surface of the horizontal projection of the roof is 64.12 m^2. The total height of the building is 1.45m, the building is buried, the upper corner of the building is at the level of the terrain. Openings on the ceiling are covered with heavy duty covers.

Construction of the building:

The structural system of the building is a reinforced concrete structure with supporting reinforced concrete walls and plates. Funding of the object is done on the base plate.

OBJECT C29.2 –TRUCK SCALE 2

General characteristics:

The building has a gross area of 64.12 m^2, a net 54.84 m^2, the surface of the horizontal projection of the roof is 64.12 m^2. The total height of the building is 1.45m, the building is buried, the upper corner of the building is at the level of the terrain. Openings on the ceiling are covered with heavy duty covers.

Construction of the building:

The structural system of the building is a reinforced concrete structure with supporting reinforced concrete walls and plates. Funding of the object is done on the base plate.

OBJECT C30 –GYPSUM, STORAGE SYLO

General characteristics:

The building is basically in circular shape up to an angle of 32,45m, and from that corner to the roof is the correct twelve-foot. The gross area of the ground floor is 3017.6 m2 and the net surface of the ground floor is 2826.0 m2, the surface of the horizontal projection of the roof is 1320.4 m2. The height of the building is determined and adapted to the technological needs and the minimum height of the roof is 56.4m, and the maximum height of the building is 59.8m. Roof inclination is 10%. On the ground floor of the building, the angle + -0,00m, there are two passages for trucks, each width 4,0m, on the corner + 6,48m is a platform, which is reached by the steps from the ground floor, from the angle + 12,8m to +23 , 76 is a storage area for plaster, a plaster conveyor is located on the panel at an angle of + 33.5m, a panel of the filter is located on the panel at the angle + 40.0m and above the platform with the hydrocyclone of the plaster. On the façade wall in axis 1 there is an opening for monorail (angle + 52,6m) for loading plaster into the building.Along the facade of the building there are climbers to go to the roof, and a protective fence around the perimeter of the roof.
All levels of the building, from ground floor to corner + 40,0m, connect the two-story staircase and elevator to the wall of the silo in the axis 5, with a multi-purpose space on the ground floor.

The silo for the deposit of filtered gypsum (containing 10% moisture) is located near the limestone milling plant, and the filters for the obtained gypsum on the tape filters. The limestone in the storage hall comes from the receiving bunker with conveyor belts, then the limestone is lifted with elevator and transferred to the depot of the limestone with the transfer tape.

Construction of the building:

The supporting structure of the silo facility for storage of plaster, to the angle + 40,0 m, is reinforced concrete. From the angle + 40,0m to the top of the structure, the structure is steel with I and U bearing roof profiles, while the façade panels of the snakes are on the box and L profile. The building is based on the base panel below which are piles. The bearing poles are reinforced concrete, AB panels with beams and ribs are located at the levels + 12,8m, + 33,5m and + 40,0m. Industrial floors are made of reinforced fine-grained concrete and finishing with monoliths with quartz sanding. The surface is machined with a rotary machine, and the joints are operated at the prescribed distance.
The supporting structure of the staircase next to the silos facility is steel skeleton. The material for the construction of the staircase is made up of: standard hot rolled profiles, sheets, large thickness sheets, screws, anchors. The bearing steel structure of the staircase and the grating treads is with the binding material. The base plate is underneath the stairs, below the layer of unarmed concrete and a layer of charged gravel.

Materialization of the building:

Roof: The roof structure of the silo is of polygonal shape (twelve), is covered with sandwich panels with a mineral wool filler (thickness d = 10cm) and a double-skinned coated steel galvanized steel sheet d = 0.8mm, while the thickness of the sheet at the upper and lower gutters d = 1.2mm. Panel has fire resistance defined by fire protection project.
The roof structure of the stairs is also covered with sandwich panels with mineral wool fillings of d = 10cm thickness and double-skinned coated with galvanized plastic coated steel sheet.

Walls: The façade structure of the silo is of circular shape up to the angle of 32,45 m, the walls are concrete and this is a storage space for plaster, from that corner to the roof (angle + 56,40 m), the polygonal shape of the wall is covered with sandwich panels, which are filled with mineral wool thickness d = 10cm and double-skinned coated steel galvanized steel sheet d = 0.8mm, with all edges on the edges and around the opening of the windows and doors. Panel has fire resistance defined by fire protection project.
The façade construction of the staircase is also covered with sandwich panels with mineral wool fillings d = 10cm and a double-skinned coated galvanized sheet steel sheet.

Locksmiths: The entry-level thermally insulated door locks measuring 90 / 205cm (two pieces) at the exits from the stairwell space into the silos and door 400 / 400cm (one piece) for the passage of the monorail for the loading of plaster with appropriate fitting, lock and automatic closing. Lockable fixed windows are installed, glazed with laminated glass d = 6mm.
The entry-level thermally insulated door locks measuring 100 / 200cm, 4 pieces, with appropriate hardware, lock and automatic closing, are built into the walls of the stairwell with the building of the silo. Locksmith fixed windows are installed, surfaces 37.80m2, glazed with laminated glass d = 6mm.

OBJECT 35- GATE HOUSE

General characteristics:

The building has a gross area of 38.80 m^2. The net surface of the building is 29.51m^2, the surface of the horizontal roof projection is 39.30m^2.
The total height of the object from the ground is 3.77m.

Construction of the building:

The building is a reinforced concrete frame construction. Pillars and beams are everything according to the static calculation. The ceiling is an easy-to-install LMT ceiling, with concreting horizontal screws. The walls are from the diter block d = 20cm. The building is based on the base plate. The roof is covered with concrete slabs in the fall of 3%.

Materialization of the building:

The floor finish is finished with ceramic tiles, with pre-production of hydro and thermal insulation.
Flat roof layers: steam boiler, thermal insulation, styrofoam d = 22cm, layer for d = 4-18.5cm, coating bitulite and 2x bituminous strip, geotextile 100gr / m ^{2} .
The walls are made of slate block, thickness d = 20cm. The partition walls are from a block of blocks d = 12 cm. Interior processing of walls and ceilings is an extension mortar with the placement and painting of walls and ceilings with dispersion paint in two layers. In the kitchen and toilet, the walls are covered with ceramic tiles. The facade is thermo-insulated "demit" from mineral wool d = 12cm, with application of two layers of adhesive and one layer of acrylic net and application of noble mortar.
The windows will be made of aluminum anodized profiles with thermoprecide, glazing with thermopan glass 4 + 12 + 4mm, with solbank on the outside and a bench on the inside. The entrance doors are aluminum made of anodized profiles, the inner doors are without thermal break.

OBJECT C36 - COMPRESSOR STATION

General characteristics:

The building is a gross area of 106.25m2. The height of the building is 6.50m.
The net surface of the building is 88.15 m2 , the surface of the horizontal roof projection is 106 .25m 2 .

Construction of the building:

The building is a reinforced concrete frame construction. Pillars and beams are everything according to the static calculation. The ceilings are reinforced concrete. The walls are from the clay block d = 25cm. The building is based on the base plate. The roof is covered with concrete slabs in the fall of 3%.

Materialization of the building:

Finishing of the floorboard is a helicoptered concrete with a reinforcement of the tread surface with quartz sanding and a color mass of your choice. In the electrical room there is a double floor with a galvanized insulated sheet metal, load of 500kg / m 2 with a vinyl plate finish.
In the floors, depending on the purpose of the rooms, the floor layers will be made with cement screed, waterproofing and thermal insulation of styrofoam.
Flat roof layers: steam boiler, thermal insulation, styrofoam d = 22cm, layer for d = 4-18.5cm, coating bitulite and 2x bituminous strip, geotextile 100gr / m 2 .
The walls are made of slate block, thickness d = 25cm. The partition walls on the floor are from diter block d = 20cm. Interior processing of walls and ceilings is a prolonged mortar with the patting and painting of walls and ceilings with semi-dispersion paint in two layers. The facade is thermally insulated with half-hard mineral wool plates d = 15 cm, finishing is made of exposed bricks
The windows will be made of aluminum anodized profiles with thermoprekid, glazed with appropriate glass, laminated d = 6mm. The entrance door is thermo-insulated locksmith, double-winged with appropriate fitting, lock and proper closing.

FACILITY C39 –LIMESTONE RAILWAY UNLOADING
General characteristics:

The base of the building is a gross area of 190.92 m^2. The height of the object is determined and adapted to the technological needs, it is 10.15m from the ground level. The roof is dual in the inclination of 15%.

Construction of the building:

The bearing structure of the building is steel skeleton. The building is based on the foundations of the male. Bearing poles are also profiles, which are interconnected by horizontal steel beams and ribs.

Materialization of the building:

The roof
Covering the roof is TR zinc plated steel sheet d = 0.8mm, and the thickness of the sheet at the upper and lower outlet gutters is d = 1.2mm.

Walls
The coating of the façade is performed by TR galvanized plastic sheet steel d = 0.8mm.

II EXECUTION PHASE-ABSORBER SYSTEM

OBJECT C1 - 01 ASORBER 1HTD

General characteristics:
Absorber is the dimensions Ø 24900mm in the base, and the inclinations 33.90m is Ø 12300mm. Height of the absorber ~ 33900mm. The absorber is a steel cylindrical vessel mounted and fastened to a reinforced concrete base plate.

Construction of the building:
The foundation of the absorber is a reinforced concrete slab, and at the top of the absorber is connected a chimney that is supported and fixed to its own steel structure. The construction is lattice. The dimensions of the base plate and the foundation of the chimney will be detailed in the static calculation. The foundation plate and the foundation of the chimney are intended to be placed on the drilled piles system. Parameters of soil for the calculation of piles are specified in the documentation on geotechnical tests.

Materialization of the building:
The absorber is coated with an insulating coating with a substructure. At certain levels, work platforms and steel stairs are set up in everything according to technological processes.
:
OBJECT C2 - 02 ASORBER 2HTD

General characteristics:
Absorber is the dimensions Ø 24900mm in the base, and the inclinations 33.90m is Ø 12300mm. Height of the absorber ~ 33900mm. The absorber is a steel cylindrical vessel mounted and fastened to a reinforced concrete base plate.

Construction of the building:
The foundation of the absorber is a reinforced concrete slab, and at the top of the absorber is connected a chimney that is supported and fixed to its own steel structure. The construction is lattice. The dimensions of the base plate and the foundation of the chimney will be detailed in the static calculation. The foundation plate and the foundation of the

chimney are intended to be placed on the drilled piles system. Parameters of soil for the calculation of piles are specified in the documentation on geotechnical tests.

Materialization of the building:
The absorber is coated with an insulating coating with a substructure. At certain levels, work platforms and steel stairs are set up in everything according to technological processes:

OBJECT C3-1HTD –RECIRCULATION PUMP BUILDING 1HTD-1

General characteristics:

The building is basically rectangular in shape, the gross surface of the ground floor is 346,0 m2, and the net surface of the ground floor is 338,4 m2, the surface of the horizontal projection of the roof is 361,32 m2. On the ground floor there are four pumps, from which the pipes come to the absorber. The height of the building is determined and adapted to the technological needs and the minimal height of the roof is + 11,10m, and the maximum height of the roof of the building is + 12,60m from the ground (-0,30m). The roof is monolithic with a slope of 10%. The ground floor of the building is raised from the surrounding area by 30cm (the angle of the floor is + -0.00m). Pumping platforms running from the pump are at + 7.5m height. At 1.5m from the facade of the pump plant in axis D, there is an elevator, which is connected to the platforms with an absorber. The entrance to the building is: ground floor one wall in the axis A, and pedestrian entrance to the platform in the wall in the axis 1. With the construction structure and platforms the object is connected to the Absorber.
By recirculation pumps, the slurry of the ground limestone is passed through the spray nozzles distributed on the console carriers in the absorber. Pumps and process water lead to a fresh water tank for each absorber.

Materialization of the building:

Walls: Facade sandwich panels with filling of mineral wool with thickness d = 10cm and double-skinned galvanized steel sheet d = 0.8mm are installed, with all edges on the edges and around the opening of the windows and doors.

Roof: Roof sandwich panels with mineral wool fillings d = 10cm are installed, and double-sided coating of galvanized plasticised steel sheet d = 0.8mm, and the thickness of the sheet at the upper and lower gutters is d = 1.2mm. .

Locksmiths: An entry-level thermally insulated locksmith door is installed, one dimension is 100 / 205cm and one door is 400x450cm in size, with a suitable hinge, lock and automatic closing.
Lockable fixed windows are installed with glazing with laminated glass d = 6mm, six pieces of windows measuring 150x160cm.

Construction of the building:

The structure is steel, the columns are profiles, are based on the male, and under the pumps are the base slabs.
The floor slab is reinforced concrete, with smooth finishing and finishing with a helicopter and reinforcing tread with quartz sanding and a choice of colored mass, with cutting the joints and filling the joints.

OBJECT C3-2 HTD-BUILDING RECYCLING PUMPS 2HTD-1

General characteristics:

The building is basically rectangular in shape, the gross surface of the ground floor is 346,0 m2, and the net surface of the ground floor is 338,4 m2, the surface of the horizontal projection of the roof is 361,32 m2. On the ground floor there are four pumps, from which the pipes come to the absorber. The height of the building is determined and adapted to the technological needs and the minimum roof height is + 11,10m, and the maximum height of the building roof is + 12,60m from the ground level (-0,30m). The roof is monolithic with a slope of 10%. The ground floor of the building is raised from

the surrounding area by 30cm (the angle of the floor is + -0.00m). Pumping platforms running from the pump are at + 7.5m height. At 1.5m from the facade of the pump plant in axis D, there is an elevator, which is connected to the platforms with an absorber. The entrance to the building is: ground floor one wall in the axis A, and pedestrian entrance to the platform in the wall in the axis 1. With the construction structure and platforms the object is connected to the Absorber.
By recirculation pumps, the slurry of the ground limestone is passed through the spray nozzles distributed on the console carriers in the absorber. Pumps and process water lead to a fresh water tank for each absorber.

Materialization of the building:

Walls: Facade sandwich panels with filling of mineral wool with thickness d = 10cm and double-skinned galvanized steel sheet d = 0.8mm are installed, with all edges on the edges and around the opening of the windows and doors.

Roof: Roof sandwich panels with mineral wool fillings d = 10cm are installed, and double-sided coating of galvanized plasticised steel sheet d = 0.8mm, and the thickness of the sheet at the upper and lower gutters is d = 1.2mm.

Locksmiths: An entry-level thermally insulated locksmith door is installed, one dimension is 100 / 205cm and one door is 400x450cm in size, with a suitable hinge, lock and automatic closing.
Lockable fixed windows are installed with glazing with laminated glass d = 6mm, six pieces of windows measuring 150x160cm.

Construction of the building:

The structure is steel, the columns are profiles, are based on the male, and under the pumps are the base slabs.
The floor slab is reinforced concrete, with smooth finishing and finishing with a helicopter and reinforcing tread with quartz sanding and a choice of colored mass, with cutting the joints and filling the joints.

C4-1HTD BUILDING - RECIRCULATION PUMP BUILDING2HTD-2

General Features:

The facility is basically rectangular, gross floor area is 382.1 m2 and the net floor area is 374.0 m2, the horizontal projection of the roof is 398.45 m2. With a facade wall of the axis G of the lift, which is an integral part of the building pumping stations. On the ground floor are placed four pumps, out of which the pipes (diameter 1.43m) to the absorber. The height of the object is determined and adapted to the technological needs and the minimum height of the roof is + 11.10m and the maximum height of the roof of the building is + 12.60m above ground level (-0,30m). The roof is a single pitch with a slope of 10%. The ground floor is lifted from the surrounding terrain to 30cm (angle of the floor is + -0,00m). Platform to enter the building from the outside platform is located at a height of 3,5 m + platform to service pipes that go from the station, located on the + 7.5m height.Fabric structures and platforms facility is connected to the absorber. Platform to enter / exit the elevator are located at elevations of + 9.3m, 15,4m, 23,5m +, + 25,3m, 33,9m +. The entrance building at ground - a sectional door in the wall of the axis G (dimensions 400 / 450cm), and pedestrian entrance to the platform + 3,5m in the wall in the axis 5. Above the building of the pumping station, on the platform at a height of 25,0m + there is the tank of the emergency line (A1-C40 Emergency water tank), a diameter of 7.6 m, the height of 10,1m, with the platform at the top.a diameter of 7.6 m, the height of 10,1m, with the platform at the top.a diameter of 7.6 m, the height of 10,1m, with the platform at the top.
Recirculation pumps, the suspension of ground limestone is passed through a suspension of a spray nozzle arranged on the cantilever beam in the absorber. Pumps and process water leading to the reservoir of fresh water for each absorber.

The materialization of the object:

Walls: are placed facade sandwich panels with mineral wool filling thickness d = 10 cm and a cladding of galvanized sheet steel, d = 0.8 mm, with all flashings at the edges and around the window and door openings.

Roof: are placed on roof panels with mineral wool filling thickness d = 10 cm, and a cladding of galvanized sheet steel, d = 0.8 mm, a thickness of the sheet at the upper and lower discharge gutter is d = 1.2mm.

Doors and Windows: Installed insulated front door locksmith, one measuring 100 / 205cm and one door sizes 400x450cm, with the appropriate hinges, locks and automatic closing.
They are installed in windows with fixed bravarski glass with laminated glass d = 6 mm, six pieces of the window dimension 150x160cm

Construction of the building:

The structure is steel, truss profiles are based are single, and pumps under the foundation slab.
The floor plate is made of reinforced concrete, with the development of the smooth formwork with subsequent treatment with a helicopter and the tread reinforcement of the quartz granules and weight and with different colors, with the joints by cutting and filling the joints.

OBJECT C4-2HTD –RECIRCULATION PUMP AND OXIDATION AIR BLOWER 2HTD -2

General Features:

The facility consists of two parts being joined, in most is located a pump station with a four pump, and a smaller part of the compression station for the oxidation of the two compressors. The gross floor area is 538.2 m2 and the net floor area is 527.9 m2, the horizontal projection of the roof is 521.18 m2. The height of the object is determined and adapted to the technological needs and the minimum height of the roof is + 11.10m and the maximum height of the roof of the building is + 12.60m above ground level (-0,30m). The roof is a single pitch with a slope of 10%, ground floor of the building is lifted from the surrounding terrain to 30cm (kota the floor is -0,00m +) platform for handling pipes that go from the station, located on the + 7.5m height. Over the object on the platform at a height of 25,0m + is a fuel tank for an emergency line (A2-C40 Emergency water tank), a diameter of 7.6 m, the height of 10,1m, with the platform at the top. Entrances to the building are at ground two doors in the wall in the axis E, and pedestrian entrance to the platform in the wall in 3 axes.

Fabric structures and platforms facility is connected to the absorber. Recirculation pumps, the suspension of ground limestone is passed through a suspension of a spray nozzle arranged on the cantilever beam in the absorber. Pumps and process water leading to the reservoir of fresh water for each absorber.

Construction of the building:

The structure is steel, truss profiles are based are single, and pumps under the foundation slab.
The floor plate is made of reinforced concrete, with the development of the smooth formwork with subsequent treatment with a helicopter and the tread reinforcement of the quartz granules and weight and with different colors, with the joints by cutting and filling the joints.

The materialization of the object:

Walls: are placed facade sandwich panels with mineral wool filling thickness d = 10 cm and a cladding of galvanized sheet steel, d = 0.8 mm, with all flashings at the edges and around the window and door openings.

Roof: are placed on roof panels with mineral wool filling thickness d = 10 cm, and a cladding of galvanized sheet steel, d = 0.8 mm, a thickness of the sheet at the upper and lower discharge gutter is d = 1.2mm.

Doors and Windows: Installed insulated front door locksmith, two dimensions 100 / 205cm and one door sizes 400x450cm, with the appropriate hinges, locks and automatic closing.
They are installed in windows with fixed bravarski glass with laminated glass d = 6 mm, six pieces of the window dimension 150x160cm.

BUILDING C5 –FGD CONTROL-ELECTRICAL BUILDING

General Features:
The building is rectangular in shape, gross area GCA 2.822,09m ^{2}and net 2.552.78m ^{2}. The surface of the horizontal projection of the roof is 943.19 m ^{2}. Height of the building from ground level is ~ 10.20m.

Construction of the building:
The building is made of reinforced concrete frame structure. Columns and beams are all in accordance with the static proračunu.Tavanica is made of reinforced concrete. The facility is made of reinforced concrete lift. Basement walls made of reinforced concrete thickness d = 25cm.
The building is founded on a thorough ploči.Krov is covered with concrete slabs, declined by 3%.

The materialization of the object:
The walls are made of clay blocks, the thickness of d = 25cm. The interior of the walls and ceiling plaster. The facade is insulated semi-rigid mineral wool plates d = 15 cm, the surface finish TR steel plasticated sheet d = 0.8cm.
The windows are made of anodized aluminum profiles with thermal glazed corresponding laminated glass from 6mm. The entrance door is insulated on the locksmith, measuring 2060 / 2200mm with suitable hinges, locks and closing.Control building is done in shifts, and the number of workers by one shift is as follows:

· Workshop and warehouse 3 people
· Laboratory 3 people
· Control Room 3 people
· Engineers Room 3 people
· CEMS control room 1 person

BUILDING C6-1 HTD- OXIDATION AIR BLOWER BUILDING

General Features:

The building is physically independent but functionally connected to a pumping station for the absorber A1. The facility has two compressors for the oxidation, the gross floor area is 176.0 m2 and the net floor area is 170.64 m2, the horizontal projection of the roof is 186,96 m2. The height of the object is determined and adapted to the technological needs and the minimum height of the roof is + 10.50m and the maximum height of the roof + 11.65m above ground level (-0,30m). The roof is a single pitch with a slope of 10%. The ground floor is lifted from the surrounding terrain to 30cm (ground floor level is + -0,00m). Platform for handling pipes that go from the compressor to oxidation, is located on the + 4,5m, 7,0m +, and + 8,5m. The entrance is on the wall in the axis A.

The materialization of the object:

Walls: are placed facade sandwich panels with mineral wool filling thickness d = 10 cm and a cladding of galvanized sheet steel, d = 0.8 mm, with all flashings at the edges and around the window and door openings.

Roof: are placed on roof panels with mineral wool filling thickness d = 10 cm, and a cladding of galvanized sheet steel, d = 0.8 mm, a thickness of the sheet at the upper and lower discharge gutter is d = 1.2mm.

Body: Sets the guttering and downpipes made of cast iron coated refined tar, according to the standards. Bleed pipes are fixed to the metal holders max. 2.0m.

Doors and Windows: Installed insulated front door locksmith, dimensions 400x450cm, with the appropriate hinges, locks and automatic closing. At the facility there are no windows.

Construction of the building:

The structure is steel, truss profiles are based are single and under the compressor for the oxidation of the base plate. The floor plate is made of reinforced concrete, with the development of the smooth formwork with subsequent treatment with a helicopter and the tread reinforcement of the quartz granules and weight and with different colors, with the joints by cutting and filling the joints.

BUILDING C7 –EMERGENCY DIESEL GENERATOR

General Features:
The building has a gross area 106.67m^2, net 93.56m^2, the surface of the horizontal projection of the roof is 107.51m^2. Height of the building from ground level is 7.00m.

Construction of the building:
The building is made of reinforced concrete frame structure. Columns and beams are all in accordance with the static calculation. The ceiling is made of reinforced concrete. The walls are made of clay blocks d = 25cm. The building is founded on the base plate. The roof is covered with concrete slabs falling 3%.

The materialization of the object:
The walls are made of clay blocks, the thickness of d = 25cm, The interior of the walls and ceilings is a mortar. The facade is insulated semi-rigid mineral wool plates d = 6 cm, finish TR steel plasticated sheet d = 0.8cm.
The windows are locksmith, fixed, with glazing laminated glass d = 6mm. The windows are minimized and painted in the color of choice.

BUILDING C10-1 HTD- ABSORBER DRAIN PIT

General Features:

The building has a gross area of 71.92m^2, net 58.32m^2, the surface of the horizontal projection of the roof is 71.92m^2. The total height is 6.20m, above-ground part of the building has a height of 0.30m.

Construction of the building:

The structural system of the building is made of reinforced concrete construction with supporting reinforced concrete walls and slabs. Foundation of the building was carried out on the base plate.

BUILDING C10-2HTD –ABSORBER DRAIN PIT

General Features:

The building has a gross area of 71.92m^2, net 58.32m^2, the surface of the horizontal projection of the roof is 71.92m^2. The total height is 6.20m, above-ground part of the building has a height of 0.30m.

Construction of the building:

The structural system of the building is made of reinforced concrete construction with supporting reinforced concrete walls and slabs. Foundation of the building was carried out on the base plate.

C37 BUILDING –GYPSUM SLURRY DISPOSAL SYSTEM TANK

General Features:

The building is a T-shape, gross površine176.63m ^{2}and net površine169.06m ^{2}. Visinaobjekta is determined and adapted to the technological needs. The roof is an incline of 10%, so that the height of the building ranges from 5.69m to 7.25m from ground level.

Construction of the building:

The supporting structure of the building's steel skeleton. The building is founded on footings. Supporting pillars are I profiles, which are connected together by horizontal steel girders and ribs.
On the ground floor are made industrially under reinforced concrete grained d = 20cm, MB30, reinforced with a steel mesh and the finish of the monolith with a quartz chippings. The surface is treated with a rotary machine and joints are made on the prescribed distance.

The materialization of the object:

The roof
Are placed on the building roof panels with mineral wool filling thickness of d = 100 mm, and on both sides of the galvanized sheet steel with d = 0.8 mm, a thickness of the sheet at the upper and lower discharge gutter is d = 1.2mm. Panel must have a fire resistance of a particular project fire protection.

Walls
Façade walls of the sandwich panels consists of a thickness of d = 10 cm, with a supporting grid. Composite panels have a coating of zinc plated sheet steel, d = 0.8 mm and the filling (thermal insulation) of the mineral wool thickness of d = 100mm. Façade sandwich panels with all flashings at the edges and around the opening of windows and vrata.Panel must have a fire resistance of a particular project fire protection.

locksmith
The front door is insulated, locksmith, dimensions 3000x3000mm and 1000x2000mm, with the appropriate hinges, locks and automatic closing.
The windows are locksmith, fixed with glazing laminated glass d = 6mm. The windows are minimized and painted in the color of choice.

1.6 NUMERICAL PART

1.6.1 Calculation

PHASE 1-OBJECTS	Total layout	GA
C 18– LIMESTONE TRUCK UNLOADING BUILDING	607.88	478.47
C 19 – LIMESTONE TRANSFER CONVEYOR	250.91	994.89
C 22 –LIMESTONE STORAGE BUILDING	1714.2	1506.2
C 23 –LIMESTONE AND GYPSUM ELECTRICAL BUILDING	250.89	548.82
C 24–LIMESTONE MILL BUILDING	1331.9	2040.6
C 28–LIMESTONE SLURRY FEED TANK	65	58.06
C 29.1-KTRUCK SCALE 1	64.12	64.12
C 29.2-TRUCK SCALE 2	64.12	64.12
C 30–GYPSUM STORAGE SILO	1320.4	3997.4
C 32.1-GYPSUM FILTRATE TANK 1	66.44	66.44
C 32.2-GYPSUM FILTRATE TANK 2	66.44	66.44
C 33.1-WASTE WATER FEED TANK 1	12.56	12.56
C 33.2-WASTE WATER FEED TANK 2	66.44	66.44
C 35–GATE HOUSE	39.3	38.8
C 36–COMPRESSOR STATION	106.25	106.25
C 38.1-PIPING AND ELECTRICAL RACK 1	592.71	18
C 38.2-PIPING AND ELECTRICAL RACK 2	603.6	21
C 38.3-PIPING AND ELECTRICAL RACK 3	210	16
C 38.7-PIPING AND ELECTRICAL RACK 7	190.75	18
C 38.9-PIPING AND ELECTRICAL RACK 9	461.4	24
C 38.10-PIPING AND ELECTRICAL TRENCH		
C39 – LIMESTONE RAILWAY UNLOADING	212	212
Σ=	8297.31	10418.61

C6-1HTD - OXIDATION AIR BLOWER BUILDING	186.97
C 7- EMERGENCY DIESEL GENERATOR	107.51
C 8 -ABSORBERA BLOW DOWN TANK	234.62
C 9 -FGD PROCESS WATER TANK	240.94
C10-1HTD -ABSORBER DRAIN PIT	62.64
C10-2HTD -ABSORBER DRAIN PIT	62.64
C 11- DUCTS FOR UNITS A3 I A4	82.68
C 12 -DUCTS FOR UNITS A5 I A6	142.73
C 13 - A6 BUF	50.74
C 14 - A5 BUF	33
C 15 - A4 BUF	34.21
C 16 - A3 BUF	67.09
C 37 - GYPSUM SLURRY DISPOSAL SYSTEM TANK	432
C 38.4 - PIPING AND ELECTRICAL RACK 4	106.25
C 38.5 - PIPING AND ELECTRICAL RACK 5	282.35
C 38.6 - PIPING AND ELECTRICAL RACK 6	195
C 38.6a - PIPING AND ELECTRICAL RACK 6a	120
C 38.8 - PIPING AND ELECTRICAL RACK 8	211.32
C 38.11 - PIPING AND ELECTRICAL RACK 11	172.4

C 38.12 - PIPING AND ELECTRICAL RACK 12	53	3
C 38.13 - PIPING AND ELECTRICAL RACK 13	232.43	8
C 41.1 - TRANSFORMER 3BT1	71.07	71.07
C 41.2 -TRANSFORMER 4BT1	71.07	71.07
C 41.3 - TRANSFORMER 5BT1	71.07	71.07
C 41.4 - TRANSFORMER 6BT1	71.07	71.07
C 42.1 - TRANSFORMER FP TANK 3BT1		
C 42.2-TRANSFORMER FP TANK 4BT1		
C 42.3 -TRANSFORMER FP TANK 5BT1		
C 42.4 -TRANSFORMER FP TANK 6BT1		
Σ=	7705.76	8868.99

TOTAL:

16003.07	19287.60
HORIZONTAL PROJECTION AREA	GFA

This document is not allowed to be used, printed or multiplied without written agreement of **delta inženjering**

1.6.2 Bill of quantities

No.	Position	Unit of measure	Quantity	Price(RSD)	
				Unit	Total

EXPECTED VALUE OF INVESTMENT FOR NTFGD COMPLEX:

167.000.000 EUR

Responsible designer:	Mirjana Lazić, mr.arch., dipl.ing.
License number:	300 4540 03

ИНЖЕЊЕРСКА КОМОРА СРБИЈЕ
Мирјана Б. Лазић
дипл. инж. арх.
300 4540 03
ОДГОВОРНИ ПРОЈЕКТАНТ

1.7 GRAPHICAL PART

LEGENDA / LEGEND :

GRANICA KP 1934 (1934/1,1934/2,1934/3, 1934/4) / CADASTRAL PLOT No.1934 BORDER (1934/1,1934/2,1934/3, 1934/4)

LEGENDA INFRASTRUKTURE / LEGEND OF INFRASTRUCTURE :

	POSTOJEĆI PUTEVI / EXISTING ROADS
	POSTOJEĆA ŽELEZNIČKA TRASA / EXISTING RAILWAYS
	POSTOJEĆI KANALI / EXISTING CHANNALS
	POSTOJEĆE ZGRADE / EXISTING BUILDINGS
	NOVOPROJEKTOVANE SAOBRAĆAJNICE / NEW DESIGNED ROADS
	NOVOPROJEKTOVANA ŽELEZNIČKA TRASA / NEW DESIGNED RAILWAYS
	NOVOPROJEKTOVANI ROV ZA ELEKTRO KABLOVE / NEW DESIGNED ELECTRICAL TRENCH

LEGENDA POSTOJEĆIH RELATED TO FGD PROCESS (out of scope of works) :
LEGEND OF EXISTING BUILDINGS RELATED TO FGD PROCESS (out of scope of works) :

BR. / NO.	NAZIV OBJEKTA / N A M E
A1	BLOK A1 / UNIT A1
A2	BLOK A2 / UNIT A2
A3	BLOK A3 / UNIT A3
A4	BLOK A4 / UNIT A4
A5	BLOK A5 / UNIT A5
A6	BLOK A6 / UNIT A6
ST A1-A3	POSTOJEĆI DIMNJAK ZA BLOKOVE A1-A3 / EXISTING STACK FOR UNITS A1-A3
ST A4-A6	POSTOJEĆI DIMNJAK ZA BLOKOVE A4-A6 / EXISTING STACK FOR UNITS A4-A6
ESP-A1	ELEKTROFILTER A1 / ELECTROSTATIC PRECIPITATOR A1
ESP-A2	ELEKTROFILTER A2 / ELECTROSTATIC PRECIPITATOR A2
ESP-A3	ELEKTROFILTER A3 / ELECTROSTATIC PRECIPITATOR A3
ESP-A4	ELEKTROFILTER A4 / ELECTROSTATIC PRECIPITATOR A4
ESP-A5	ELEKTROFILTER A5 / ELECTROSTATIC PRECIPITATOR A5
ESP-A6	ELEKTROFILTER A6 / ELECTROSTATIC PRECIPITATOR A6
IDF-A3	VENTILATOR A3 / ID FAN A3
IDF-A4	VENTILATOR A4 / ID FAN A4
IDF-A5	VENTILATOR A5 / ID FAN A5
IDF-A6	VENTILATOR A6 / ID FAN A6
WWTP	POSTROJENJE ZA PREČIŠĆAVANJE OTPADNE VODE / WASTE WATER TREATMENT PLANT

LEGENDA NOVOPROJEKTOVANIH OBJEKATA / LEGEND OF NEWLY DESIGNED BUILDINGS:

FAZA 1/STAGE 1 - SISTEM ZA PRERADU KREČNJAKA I GIPSA/ LIMESTONE AND GYPSUM AREA

FAZA 2/ STAGE 2 - ZONA ABSORBERA / ABSORBERS AREA

SISTEM 1 / SYSTEM 1 - SISTEM APSORBERA 01 / ABSORBER 01
SISTEM 2 / SYSTEM 2 - SISTEM APSORBERA 02 / ABSORBER 02
SISTEM 3 / SYSTEM 3 - SISTEM DIMNIH GASOVA / FLUE GAS SYSTEM
SISTEM 4 / SYSTEM 4 – SYSTEM FOR PROCESS WATER, WASTE WATER AND GYPSUM SLURRY SUSPENSION / SISTEM PROCESNE VODE, TEHNIČKE VODE I HIDROMEŠAVINE GIPSA
SISTEM 5 / SYSTEM 5 – INFRASTRUKTURNI OBJEKTI SISTEMA ODG / INFRASTRUCTURE FACILITIES OF FGD COMPLEX

BR. / NO.	NAZIV OBJEKTA / N A M E
C1	01 APSORBER / ABSORBER (1HTD)
C2	02 APSORBER / ABSORBER (2HTD)
C3-1HTD	ZGRADA RECIRKULACIONIH PUMPI 1HTD-1 / RECIRCULATION PUMP BUILDING 1
C4-1HTD	ZGRADA RECIRKULACIONIH PUMPI 1HTD-2 / RECIRCULATION PUMP BUILDING 2
C3-2HTD	ZGRADA RECIRKULACIONIH PUMPI 2HTD-1 / RECIRCULATION PUMP BUILDING 1
C4-2HTD	ZGRADA RECIRKULACIONIH PUMPI I DUVALJKI 2HTD-2 / RECIRCULATION PUMP & OXIDATION AIR BLOWER
C5	GLAVNA ELEKTRO-KOMANDNA ZGRADA / FGD CONTROL - ELECTRICAL BUILDING
C6-1HTD	ZGRADA DUVALJKI 1HTD / OXIDATION AIR BLOWER BUILDING
C7	ZGRADA DIZEL AGREGATA / EMERGENCY DIESEL GENERATOR
C8	REZERVOAR ZA PRAŽNJENJE APSORBERA / ABSORBER BLOW DOWN TANK
C9	REZERVOAR PROCESNE VODE / FGD PROCESS WATER TANK
C10-1HTD	DRENAŽNA JAMA 1HTD / ABSORBER DRAIN PIT
C10-2HTD	DRENAŽNA JAMA 2HTD / ABSORBER DRAIN PIT
C11	DIMNI KANALI BLOKOVA A3 I A4 / DUCT FOR UNITS A3 & A4
C12	DIMNI KANALI BLOKOVA A5 I A6 / DUCT FOR UNITS A5 & A6
C13	BUSTER VENTILATOR BLOKA A6 / A6 BUF
C14	BUSTER VENTILATOR BLOKA A65 / A5 BUF
C15	BUSTER VENTILATOR BLOKA A64 / A4 BUF
C16	BUSTER VENTILATOR BLOKA A3 / A3 BUF
C18	ISTOVARNA STANICA ZA KAMIONE / LIMESTONE TRUCK UNLOADING BUILDING
C19	TRANSPORT IZMEĐU ISTOVARNE STANICE VAGONA I KAMIONA / LIMESTONE TRANSFER CONVEYOR
C22	ZGRADA SKLADIŠTENJA KREČNJAKA / LIMESTONE STORAGE BUILDING
C23	ELEKTRO-KOMANDNA ZGRADA KREČNJAKA I GIPSA / LIMESTONE AND GYPSUM ELECTRICAL BUILDING
C24	ZGRADA MLEVENJA / LIMESTONE MILL BUILDING
C28	REZERVOAR HIDROMEŠAVINE KREČNJAKA / LIMESTONE SLURRY FEED TANK
C29.1	KOLSKA VAGA 1 / TRUCK SCALE 1
C29.2	KOLSKA VAGA 2 / TRUCK SCALE 2
C30	SILOS GIPSA / GYPSUM STORAGE SILO
C32.1	REZERVOAR FILTRATA GIPSA 1 / GYPSUM FILTRATE TANK 1
C32.2	REZERVOAR FILTRATA GIPSA 2 / GYPSUM FILTRATE TANK 2
C33.1	REZERVOAR TEHNIČKE VODE 1 / WASTE WATER FEED TANK 1
C33.2	REZERVOAR TEHNIČKE VODE 2 / WASTE WATER FEED TANK 2
C35	PORTIRNICA / GATE HOUSE
C36	KOMPRESORSKA STANICA / COMPRESSOR STATION
C37	ZGRADA ZA ZUSNJAVANJE HIDROMEŠAVINE GIPSA / GYPSUM SLURRY DISPOSAL SYSTEM TANK
C38.1	CEVNI MOST 1 / PIPING AND ELECTRICAL RACK 1
C38.2	CEVNI MOST 2 / PIPING AND ELECTRICAL RACK 2
C38.3	CEVNI MOST 3 / PIPING AND ELECTRICAL RACK 3
C38.4	CEVNI MOST 4 / PIPING AND ELECTRICAL RACK 4
C38.5	CEVNI MOST 5 / PIPING AND ELECTRICAL RACK 5
C38.6	CEVNI MOST 6 / PIPING AND ELECTRICAL RACK 6
C38.6a	CEVNI MOST 6a / PIPING AND ELECTRICAL RACK 6a
C38.7	CEVNI MOST 7 /PIPING AND ELECTRICAL RACK 7
C38.8	CEVNI MOST 8 / PIPING AND ELECTRICAL RACK 8
C38.9	CEVNI MOST 9 / PIPING AND ELECTRICAL RACK 9
C38.10	CEVNI I ELEKTRO KANAL / PIPING AND ELECTRICAL TRENCH
C38.11	CEVNI MOST 11 / PIPING AND ELECTRICAL RACK 11
C38.12	CEVNI MOST 12 / PIPING AND ELECTRICAL RACK 12
C38.13	CEVNI MOST 13 / PIPING AND ELECTRICAL RACK 13
C39	ISTOVARNA STANICA KREČNJAKA ZA VAGONE / LIMESTONE RAILWAY UNLOADING
C41.1	TRANSFORMATOR 3BT1 / TRANSFORMER - 3BT1
C41.2	TRANSFORMATOR 4BT1 / TRANSFORMER - 4BT1
C41.3	TRANSFORMATOR 5BT1 / TRANSFORMER - 5BT1
C41.4	TRANSFORMATOR 6BT1 / TRANSFORMER - 6BT1
C42.1	REZERVOAR PROTIVPOŽARNE VODE ZA TRANSFORMATOR 3BT1/ TRANSFORMER FP TANK 3BT1
C42.2	REZERVOAR PROTIVPOŽARNE VODE ZA TRANSFORMATOR 4BT1 / TRANSFORMER FP TANK 4BT1
C42.3	REZERVOAR PROTIVPOŽARNE VODE ZA TRANSFORMATOR 5BT1 / TRANSFORMER FP TANK 5BT1
C42.4	REZERVOAR PROTIVPOŽARNE VODE ZA TRANSFORMATOR 6BT1 / TRANSFORMER FP TANK 6BT1

ИНЖЕЊЕРСКА КОМОРА СРБИЈЕ
Мирјана Б. Лазић
дипл.инж.арх.
300 4540 03
ОДГОВОРНИ ПРОЈЕКТАНТ

REV.	Opis revizije / Revision description	Datum/Date	Crtao/Drawn	Overio/Appr.
01				

BROJ UGOVORA /CONTRACT NO: Contract No.: 12.01.12625/52-17

Konzorcium: / Consortium: MITSUBISHI HITACHI POWER SYSTEMS; ITOCHU; MITSUBISHI HITACHI POWER SYSTEMS EUROPE; Jedinstvo

delta inženjering
www.deltainzenjering.rs

	Ime i prezime / Name	Paraf/Sign.
Odg. projektant: / Respon. designer:	Mirjana Lazić, dipl. ing.	
Licenca odg.proj.: / Res. des. license:	300 454 03	
Vrsta teh. dok.: / Project type:	IDR - Idejno rešenje / IDR - Conceptual design	
Datum: / Date:	29.01.2018	Projekcija: / Projection:
Deo projekta: / Project part:	Projekat arhitekture / Arhitectural Design	

Investitor: / Client: JP ELEKTROPRIVREDA SRBIJE / PE ELEKTROPRIVREDA SERBIA

Objekat: / Complex: Postrojenje za ODG za TE Nikola Tesla A / FGD Construction Project for TPP Nikola Tesla

Postrojenje: / Facility:

Deo postrojenja: / Unit:

Razmera: / Scale: 1/1000

Naziv crteža: / Drawing name: SITUACIJA / GENERAL LAYOUT PLOT PLAN

Crtež broj: / Drawing number: NTFGD-S0.0-IDR-1-00-000D-rev00

List/od: / Page/of: 1/1

Rev. 00

Ime fajla / File name: NTFGD-S0.0-IDR-1-00-000-rev00.dwg

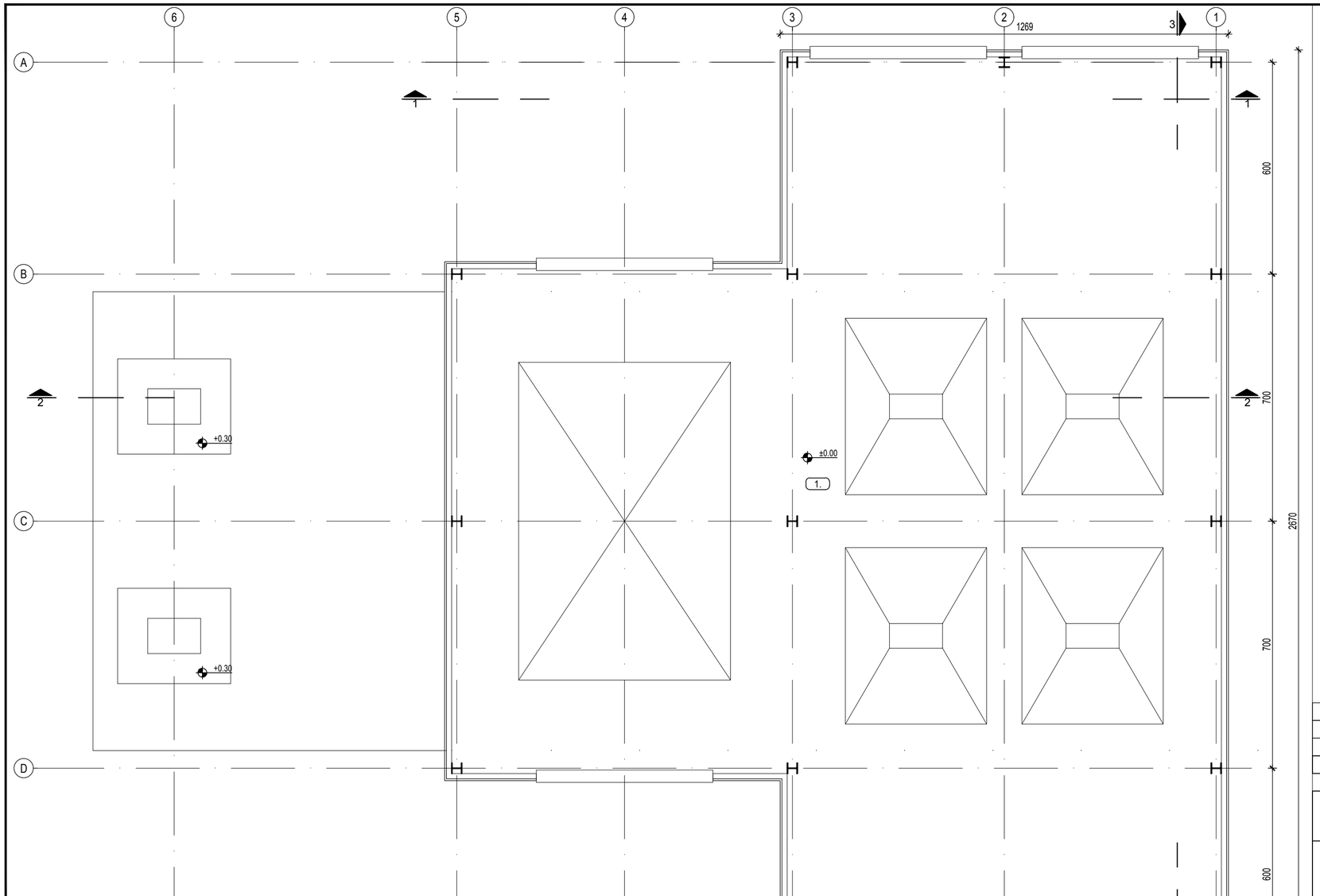

broj / No.	NAMENA PROSTORIJA / ROOMS	površina / area (m²)	obim / perimeter (m')
OSNOVA PRIZEMLJA - NIVO ±0.00 / GROUND FLOOR ±0.00			
XXXX			
1.	ISTOVAR KAMIONA SA KRECNJAKOM / LIMESTONE TRUCK UNLOADING BUILDING	456,92	103,20
	UKUPNO / TOTAL:	456,92	
	NETO POVRŠINA PRIZEMLJA /NETO AREA GROUND FLOOR:	456,92	
	BRGP / GBA:	478,47	

REV.	Opis revizije / Revision description	Datum/Date	Crtao/Drawn	Overio/Appr.
0	---	---	---	

Broj ugovora / Contract No :**12.01.12625/52-17**

Konzorcium:
Consortium:

delta inženjering
www.deltainzenjering.rs

	Ime i prezime / Name	Potpis/Sign.
Odg. projektant: Respon. designer:	Mirjana Lazić dipl. ing.arh.	
Licenca odg.proj.: Res. des. license:	300 4540 03	
Vrsta teh. dok.: Project type:	IDR - Idejno rešenje IDR - Conceptual design	
Datum: Date:	25.01.2017	Projekcija: Projection:
Deo projekta: Project part:	Projekat arhitekture Arhitectural Design	

Investitor: Client: JP ELEKTROPRIVREDA SRBIJE
PE ELEKTROPRIVREDA SERBIA

Objekat: Complex: Postrojenje za ODG za TE Nikola Tesla A
FGD Construction Project for TPP Nikola Tesla

Postrojenje: Facility: Istovarna stanica za kamione
Limestone Truck Unloading Building

Deo postrojenja: Unit:

Razmera: Scale: 1/100

Naziv crteža: Drawing name: OSNOVA PRIZEMLJA
GROUND FLOOR PLAN

Crtež broj: Drawing number: NTFGD-S1.0-IDR-1.0.0-C18-001D-rev00

List/od: Page/of: 1/4

Rev. 0

Ime fajla / File name: NTFGD-S1.0-IDR-1.0.0-C18-rev00.dwg

ZA.Q.01 - Rev. 3 - 15.05.15.

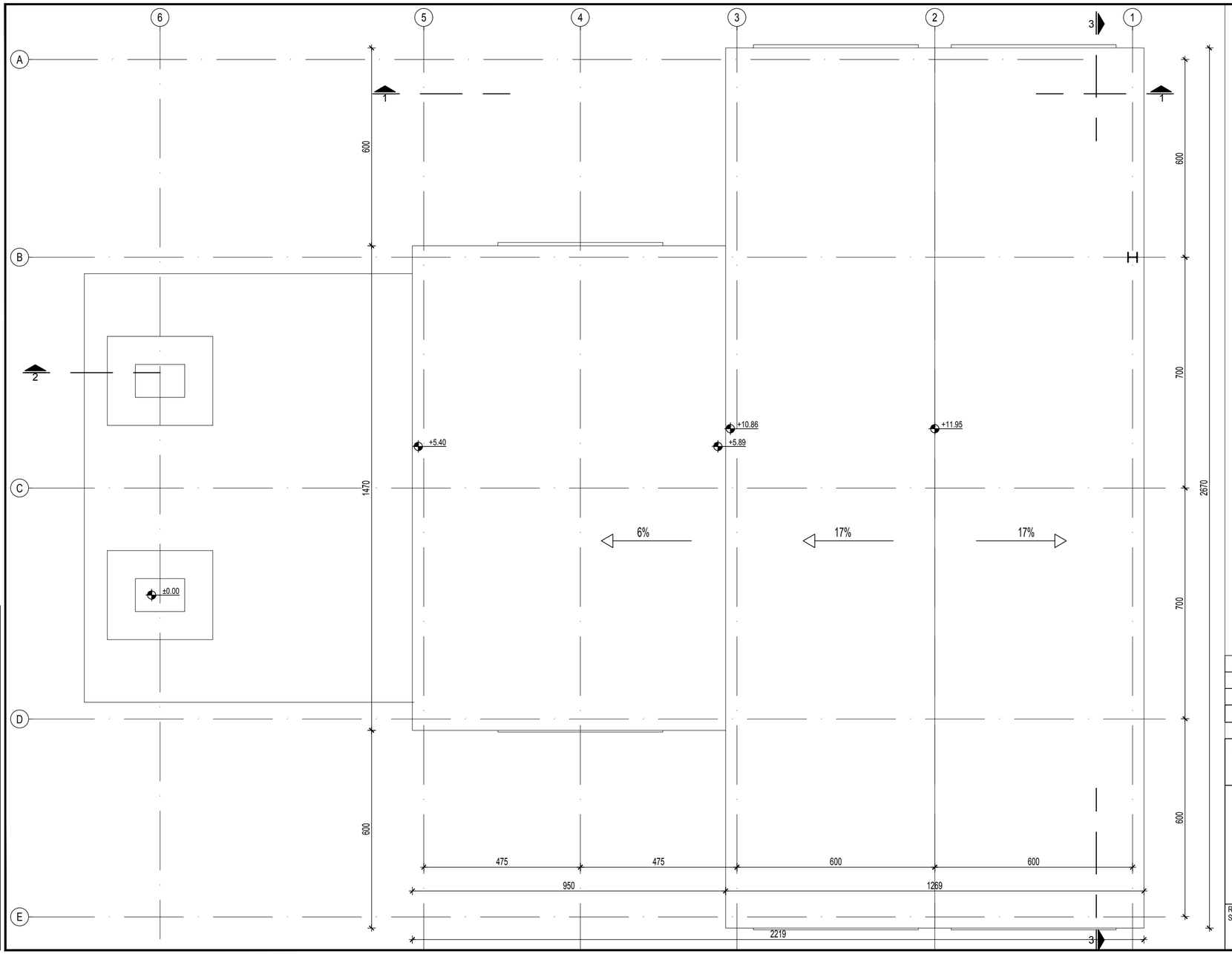

WAY. BREACH OR INFRINGEMENT OF ANY KIND WILL LEAD TO LEGAL ACTION.

CONFIDENTIAL
THIS DOCUMENT IS THE PROPERTY OF MITSUBISHI HITACHI POWER SYSTEMS, LTD. (MHPS)
AND CONFIDENTIAL. IT MUST NEITHER BE COPIED NOR USED FOR ANY PURPOSE OR MANNER OTHER THAN EXPRESSLY PERMITTED BY MHPS OR WITH A PRIOR WRITTEN CONSENT OF MHPS NEITHER IS IT TO BE HANDED OVER NOR COMMUNICATED TO A THIRD PARTY IN ANY

REV.	Opis revizije / Revision description	Datum/Date	Crtao/Drawn	Overio/Appr.
2				
1				
0		---	---	

Broj ugovora / Contract No :**12.01.12625/52-17**

Konzorcium:
Consortium:

MITSUBISHI HITACHI POWER SYSTEMS | ITOCHU | MITSUBISHI HITACHI POWER SYSTEMS EUROPE | jedinstvo

delta inženjering
www.deltainzenjering.rs

	Ime i prezime / Name	Paraf/Sign.
Odg. projektant: Respon. designer:	Mirjana Lazić dipl. ing.arh.	
Licenca odg.proj.: Res. des. license:	300 4540 03	
Vrsta teh. dok.: Project type:	IDR - Idejno rešenje IDR - Conceptual design	
Datum: Date:	Decembar 2017	Projekcija: Projection:
Deo projekta: Project part:	Projekat arhitekture Arhitectural Design	

Investitor: Client: JP ELEKTROPRIVREDA SRBIJE / PE ELEKTROPRIVREDA SERBIA

Objekat: Complex: Postrojenje za ODG za TE Nikola Tesla A
FGD Construction Project for TPP Nikola Tesla

Postrojenje: Facility: Istovarna stanica za kamione
Limestone Truck Unloading Building

Deo postrojenja: Unit:

Razmera: Scale: 1/100

Naziv crteža: Drawing name: OSNOVA KROVA / ROOF PLAN

Crtež broj: Drawing number: NTFGD-S1.0-IDR-1.0.0-C.18-002D-rev00

List/od: Page/of: 2/4

Rev. 0

Ime fajla / File name: NTFGD-S1.0-IDR-1.0.0-C18-rev00.dwg

ZA.Q.01 - Rev. 3 - 15.05.15.

ИНЖЕЊЕРСКА КОМОРА СРБИЈЕ
Мирјана Б. Лазић
дипл.инж.арх.
300 4540 03
ОВЛАШЋЕНИ ПРОЈЕКТАНТ

PRESEK 1-1
CROSS SECTION 1-1

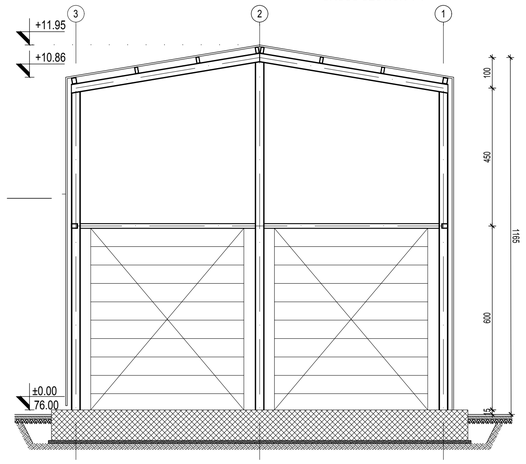

PRESEK 3-3
CROSS SECTION 3-3

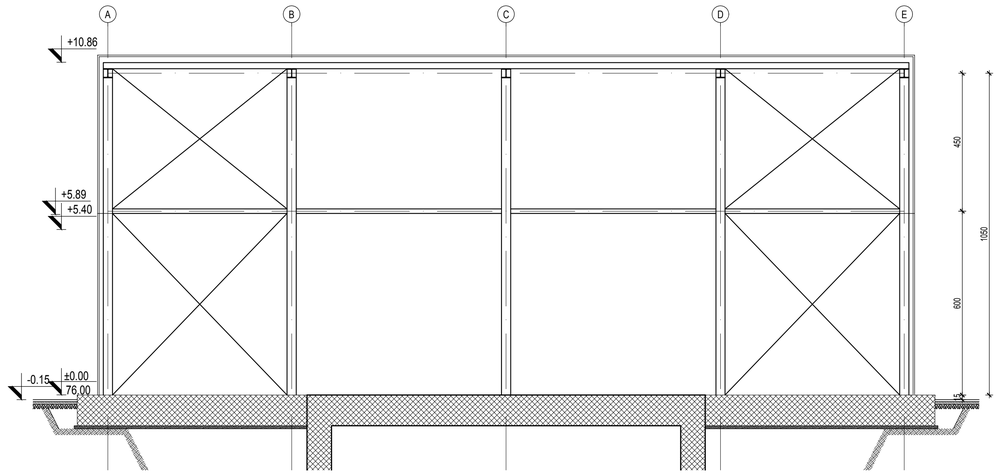

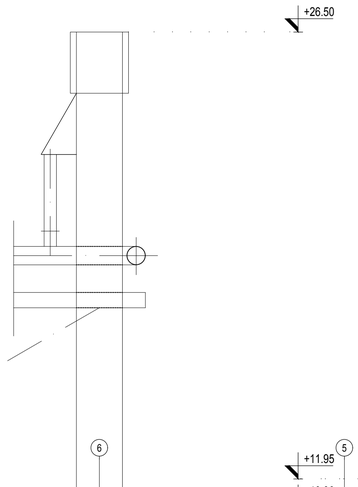

PRESEK 2-2
CROSS SECTION 2-2

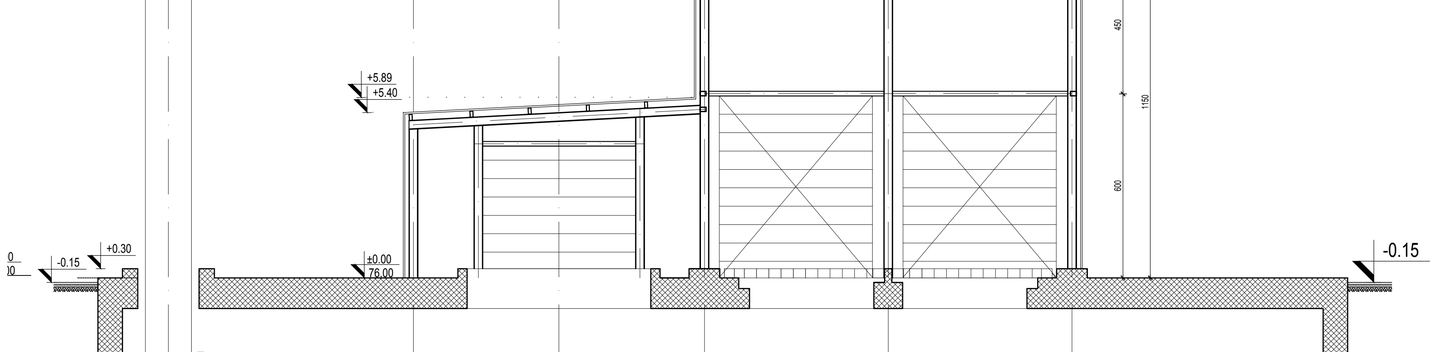

REV.	Opis revizije / Revision description	Datum/Date	Crtao/Drawn	Overio/Appr.
1				
2				
3		---	---	

Broj ugovora / Contract No :**12.01.12625/52-17**

Konzorcijum:
Consortium:

delta inženjering
www.deltainzenjering.rs

	Ime i prezime / Name	Potpis/Sign.
Odg. projektant: Respon. designer:	Mirjana Lazić dipl. ing.arh.	
Licenca odg.proj. Res. des. license:	300 4540 03	
Vrsta teh. dok.: Project type:	IDR - Idejno rešenje IDR - Conceptual design	
Datum: Date:	25.01.2017	Projekcija: Projection:
Deo projekta: Project part:	Projekat arhitekture Arhitectural Design	

Investitor: Client: JP ELEKTROPRIVREDA SRBIJE
PE ELEKTROPRIVREDA SERBIA

Objekat: Complex: Postrojenje za ODG za TE Nikola Tesla A
FGD Construction Project for TPP Nikola Tesla

Postrojenje: Facility: Istovarna stanica za kamione
Limestone Truck Unloading Building

Deo postrojenja: Unit:

Razmera: Scale: 1/100

Naziv crteža: Drawing name: PRESECI 1-1, 2-2, 3-3
CROSS SECTIONS 1-1, 2-2,3-3

Crtež broj: Drawing number: NTFGD-S1.0-IDR-1.0.0-C.18-003D-rev00

Listod: Page/of: 3/4

Rev. 1

Ime faju / File name: NTFGD-S1.0-IDR-1.0.0-C.18-003D-rev00.dwg

JK-G01 - Rev. 3 - 13.06.16

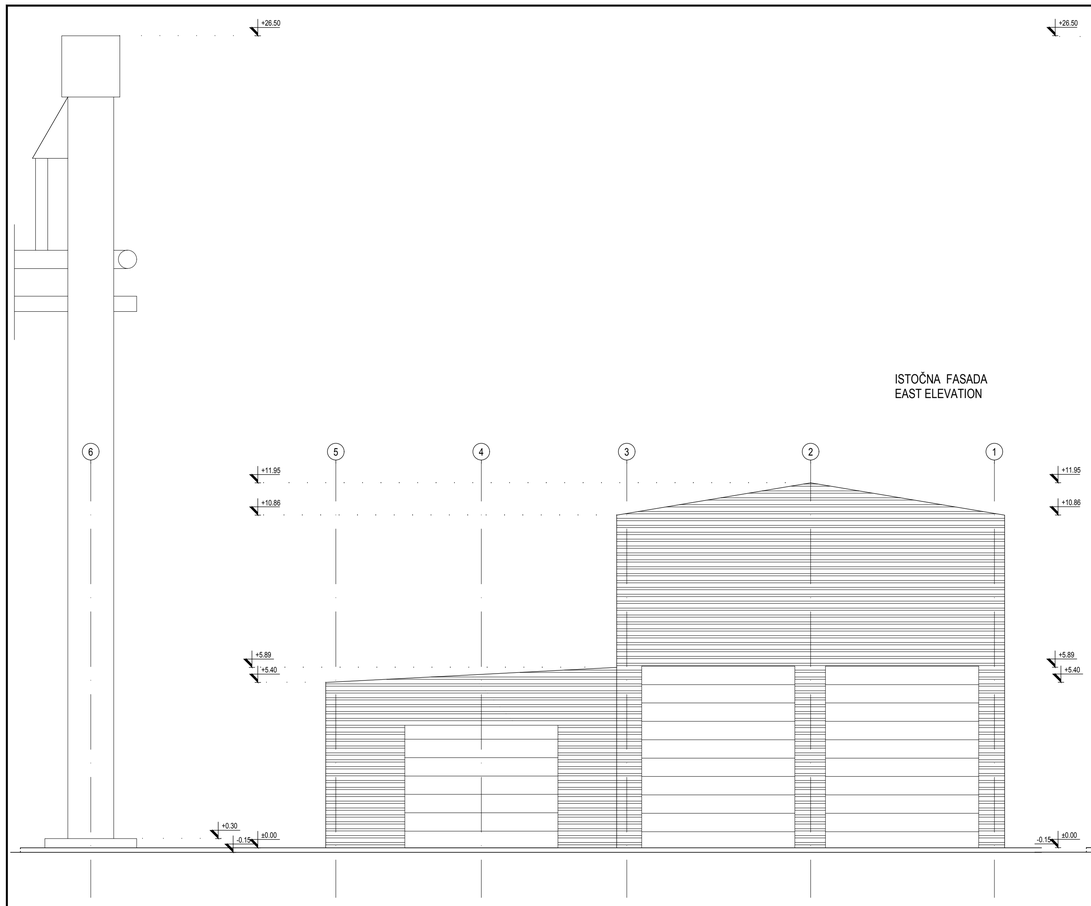

ISTOČNA FASADA
EAST ELEVATION

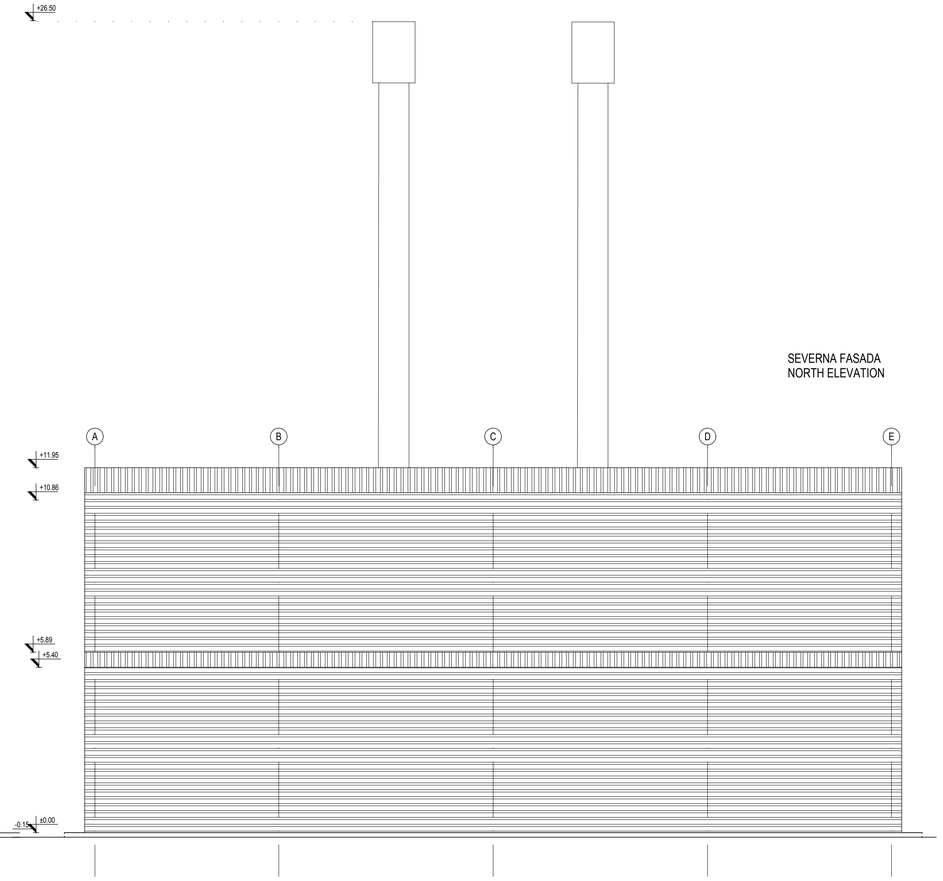

SEVERNA FASADA
NORTH ELEVATION

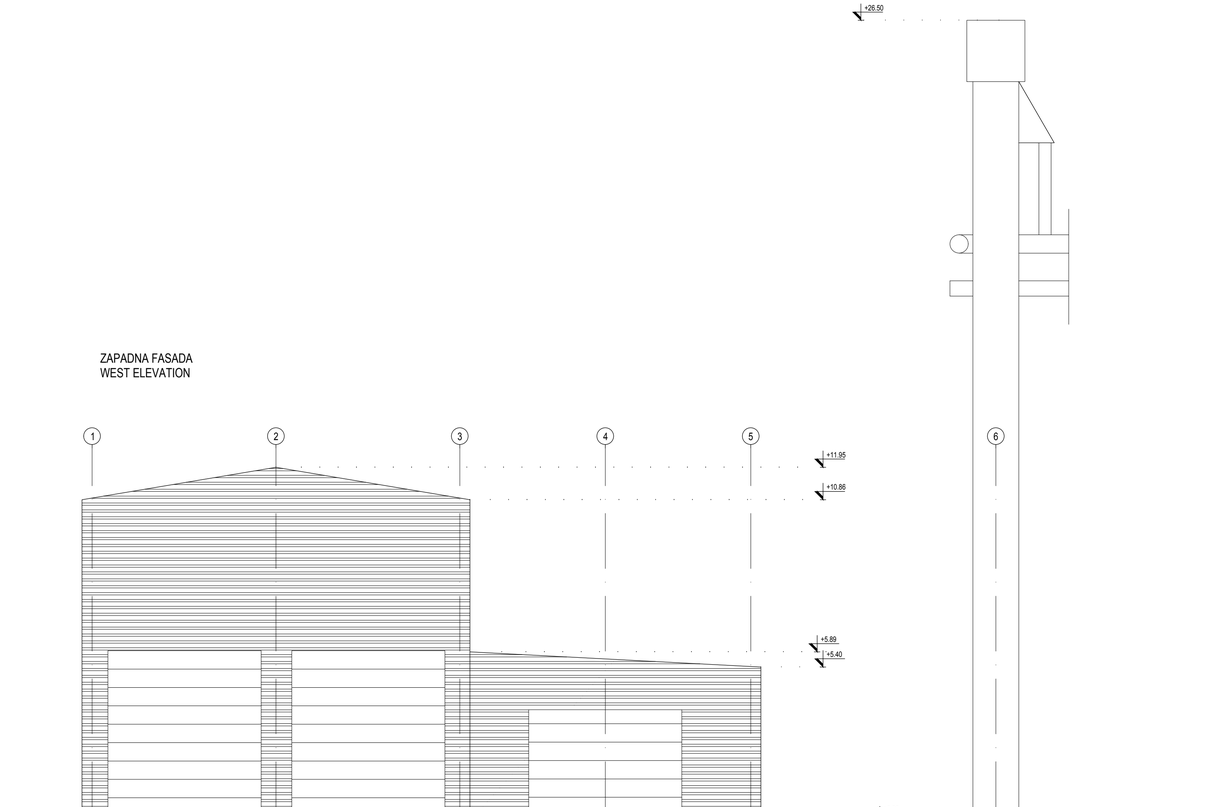

ZAPADNA FASADA
WEST ELEVATION

REV.	Opis revizije / Revision description	Datum/Date	Crtao/Drawn	Overio/Appr.
3				
2				
1		---	---	

Broj ugovora / Contract No :**12.01.12625/52-17**

Konzorcijum:
Consortium:

MITSUBISHI HITACHI POWER SYSTEMS · ЈОСНО · MITSUBISHI HITACHI POWER SYSTEMS EUROPE · Jedinstvo

delta inženjering
www.deltainzenjering.rs

	Ime i prezime / Name	Potpis/Sign.
Odg. projektant: Respon. designer:	Mirjana Lazić dipl. ing.arh	
Licenca odg.proj.: Res. des. license:	300 4540 03	

Vrsta teh. dok.: Project type: IDR - Idejno rešenje / IDR - Conceptual design

Datum: Date: Decembar 2017

Projekcija: Projection:

Deo projekta: Project part: Projekat arhitekture / Arhitectural Design

Investitor: Client: JP ELEKTROPRIVREDA SRBIJE / PE ELEKTROPRIVREDA SERBIA

Objekat: Complex: Postrojenje za ODG za TE Nikola Tesla A / FGD Construction Project for TPP Nikola Tesla

Postrojenje: Facility: Istovarna stanica za kamione / Limestone Truck Unloading Building

Deo postrojenja: Unit:

Razmera: Scale: 1/100

Naziv crteža: Drawing name: FASADE / FACADES

Crtež broj: Drawing number: NTFGD-S1--IDR-1/02-C.18-004D-rev00

Listod: Page of: 1/4

Rev. 3

Mirjana Lazić dipl.inž.arh. 300 4540 03

Ime fajla / File name: NTFGD-S1-0-IDR-1-0-C-C-18-rev-00.dwg

ZA-G31 - Rev. 3 - 15.05.15

C22 - ZGRADA SKLADIŠTENJA KREČNJAKA / LIMESTONE STORAGE BUILDING
OSNOVA PRIZEMLJA A (+-0,00) / GROUND FLOOR A (+-0,00)

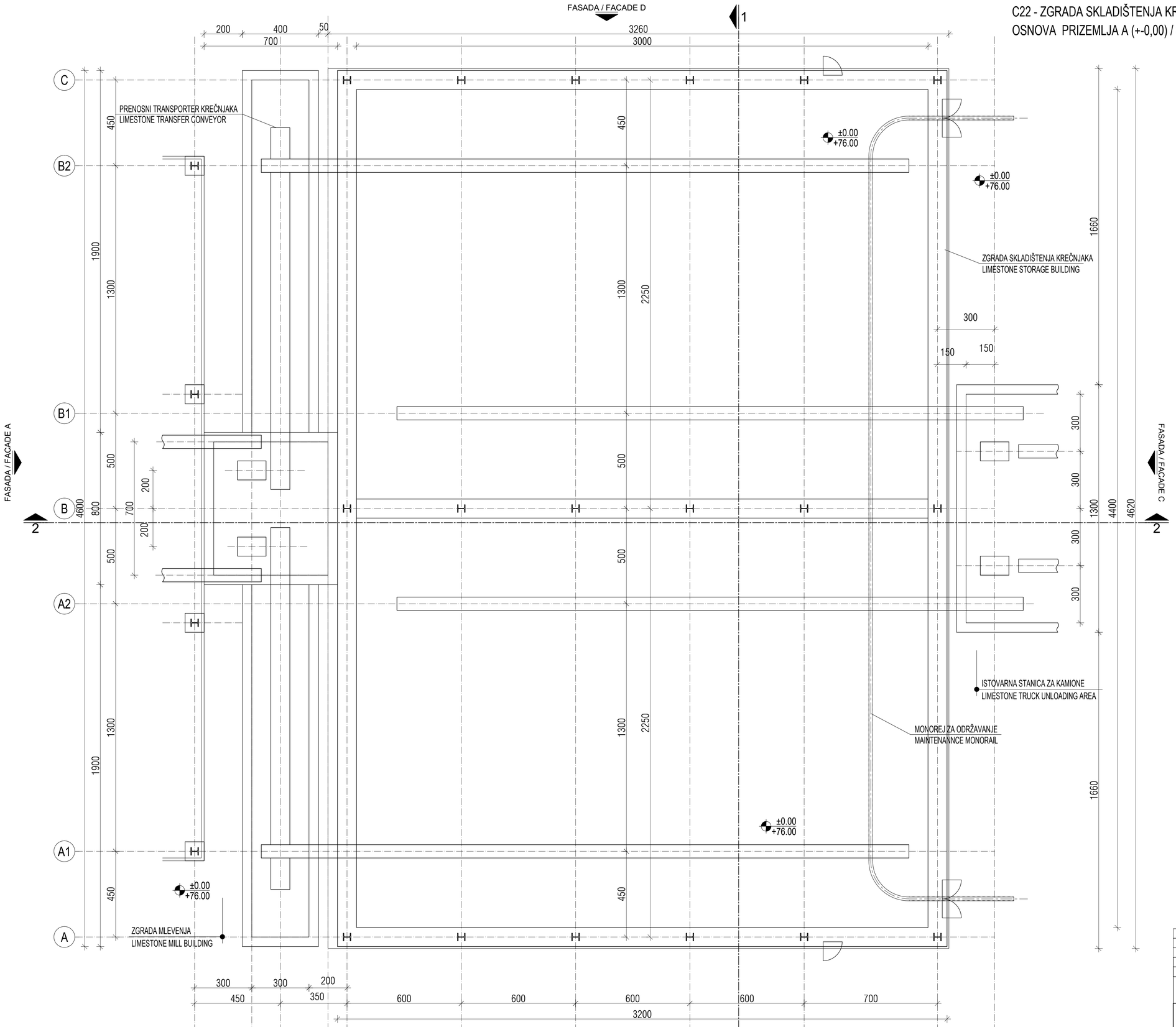

broj / No.	NAMENA PROSTORIJA / ROOMS	površina / area (m²)	obim / perimeter (m')
OSNOVA PRIZEMLJA A (+-0,00) / GROUND FLOOR A			
ZGRADA SKLADIŠTENJA KREČNJAKA / LIMESTONE STORAGE BUILDING			
1	PROSTOR SKLADIŠTENJA / STORAGE AREA	1320.0	148.0
	UKUPNO / TOTAL:	1320.0	
	NETO POVRŠINA OSNOVE A / NETO AREA A:	1320.0	
	BRUTO POVRŠINA OSNOVE A / BRUTO AREA FLOOR A:	1506.2	
	BRGP / GBA:	1506.2	
	POVRŠINA HORIZONTALNE PROJEKCIJE KROVA / AREA HORIZONTAL PROJECTION OF THE ROOF:	1506.2	
	POVRŠINA RENOSNOG TRANSPORTERA KREČNJAKA / AREA OF LIMESTONE TRANSFER CONVEYOR	208,0 m2	

LEGENDA MATERIJALA / LEGEND:

ARMIRANI BETON	REINFORCED CONCRETE
NABIJENI BETON	LEAN CONCRETE
MRŠAVI BETON /TAMPON/	LEAN CONCRETE
GITER BLOK	CLAY BLOCK
PUNA OPEKA	BRICK BLOCK
FASADNI I KROVNI PANEL	FACADES AND ROOF PANEL
MOTAŽNI PREGRADNI ZID OD GK PLOČA	PREFABRICATED WALL PANELS
TERMOIZOLACIJA	THERMAL INSOLATION
HIDROIZOLACIJA	HYDROISOLATION
ŠLJUNAK	GRAVEL
ČELIČNA KONSTRUKCIJA	STEEL CONSTRUCTION
OLUCI	CHAMFER
DROBLJENI KAMEN	GRAVEL
NABIJENA ZEMLJA	HUDDLE GROUND

REV.	Opis revizije / Revision description	Datum/Date	Crtao/Drawn	Overio/Appr.
1				
2				
3				

Broj ugovora / Contract No :12.01.12625/52-17

Konzorcijum: Consortium: MITSUBISHI HITACHI POWER SYSTEMS; STOCHU; MITSUBISHI HITACHI POWER SYSTEMS EUROPE; Jedinstvo

delta inženjering
www.deltainzenjering.rs

	Ime i prezime / Name	Potpis/Sign.
Odg. projektant: Respon. designer:	Mirjana Lazić dipl.inž.arh.	
Licenca odg.proj.: Res. des. license:	300 4540 03	

Vrsta teh. dok.: Project type: IDR - Idejno rešenje / IDR - Conceptual design
Datum: Date: 25.01.2018. Projekcija: Projection:
Deo projekta: Project part: Projekat arhitekture / Arhitectural Design

Investitor: Client: JP ELEKTROPRIVREDA SRBIJE / PE ELEKTROPRIVREDA SERBIA
Objekat: Complex: Postrojenje za ODG za TE Nikola Tesla A / FGD Construction Project for TPP Nikola Tesla
Postrojenje: Facility: Zona krečnjaka i gipsa / Limestone and gypsum area
Deo postrojenja: Unit: C22-Zgrada skladištenja krečnjaka / C22-Limestone storage building

Razmera: Scale: 1/100
Naziv crteža: Drawing name: OSNOVA PRIZEMLJA ±0.00 / FLOOR PLAN ±0.00
Crtež broj: Drawing number: NTFGD-S1.0-IDR-1.0.0-C22-001D-rev00
Listlist: Pagelist: 1/4
Rev.

Mirjana Lazić dipl.inž.arh. 300 4540 03 Inženjerska komora Srbije

Ime fajla / File name: NTFGD-S1.0-IDR-1.0.0-C22-rev00.dwg
ZA G.01 - Rev. 3 - 16.06.16.

C22 - ZGRADA SKLADIŠTENJA KREČNJAKA / LIMESTONE STORAGE BUILDING
OSNOVA KROVNIH RAVNI / ROOF PLAN

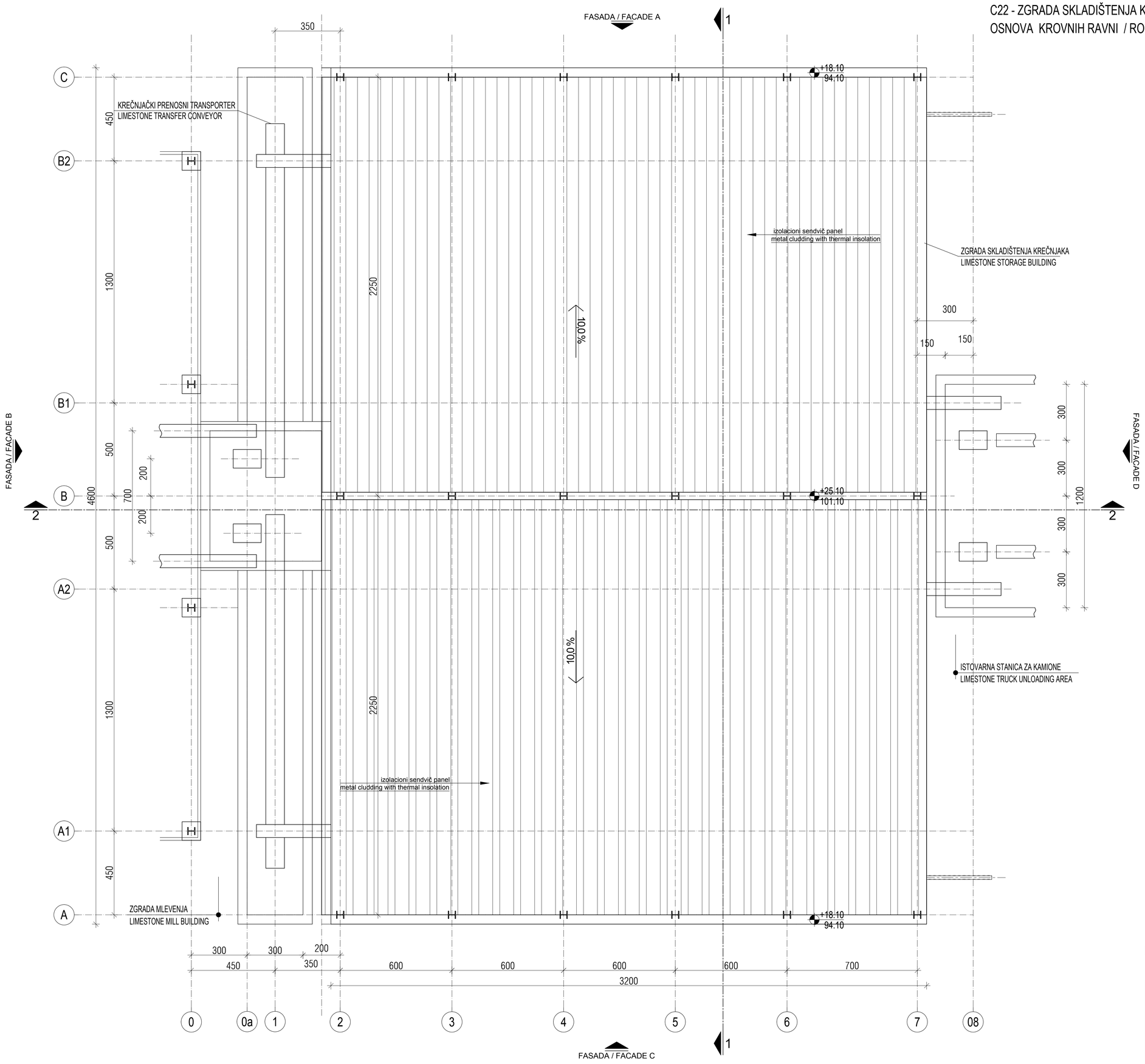

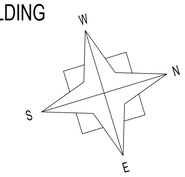

REV.	Opis revizije / Revision description	Datum/Date	Crtao/Drawn	Overio/Appr.
1				
2				
3				

Broj ugovora / Contract No :12.01.12625/52-17

Konzorcijum: Consortium: MITSUBISHI HITACHI POWER SYSTEMS; STOCHU; MITSUBISHI HITACHI POWER SYSTEMS EUROPE; Jedinstvo

delta inženjering
www.deltainzenjering.rs

	Ime i prezime / Name	Potpis/Sign.
Odg. projektant: Respon. designer:	Mirjana Lazić dipl.inž.arh.	
Licenca odg.proj.: Res. des. license:	300 4540 03	
Vrsta teh. dok.: Project type:	IDR - Idejno rešenje IDR - Conceptual design	
Datum: Date:	25.01.2018.	Projekcija: Projection:
Deo projekta: Project part:	Projekat arhitekture Arhitectural Design	

Investitor: Client: JP ELEKTROPRIVREDA SRBIJE / PE ELEKTROPRIVREDA SERBIA

Objekat: Complex: Postrojenje za ODG za TE Nikola Tesla A / FGD Construction Project for TPP Nikola Tesla

Postrojenje: Facility: Zona krečnjaka i gipsa / Limestone and gypsum area

Deo postrojenja: Unit: C22-Zgrada skladištenja krečnjaka / C22-Limestone storage building

Razmera: Scale: 1/100

Naziv crteža: Drawing name: OSNOVA KROVNIH RAVNI / ROOF PLAN

Crtež broj: Drawing number: NTFGD-S1.0-IDR-1.0.0-C22-002D-rev00

Listovi: Page of: 2/4

Rev. 1

Mirjana Б. Лазић дипл.инж.арх. 300 4540 03 Inženjerska komora Srbije

Ime fajla / File name: NTFGD-S1.0-IDR-1.0.0-C22-rev00.dwg

ZA EXP. Rev. 2 - 15.05.15

ZGRADA SKLADIŠTENJA KREČNJAKA / LIMESTONE STORAGE BUILDING
PRESEK 1-1 / CROSS-SECTION 1-1

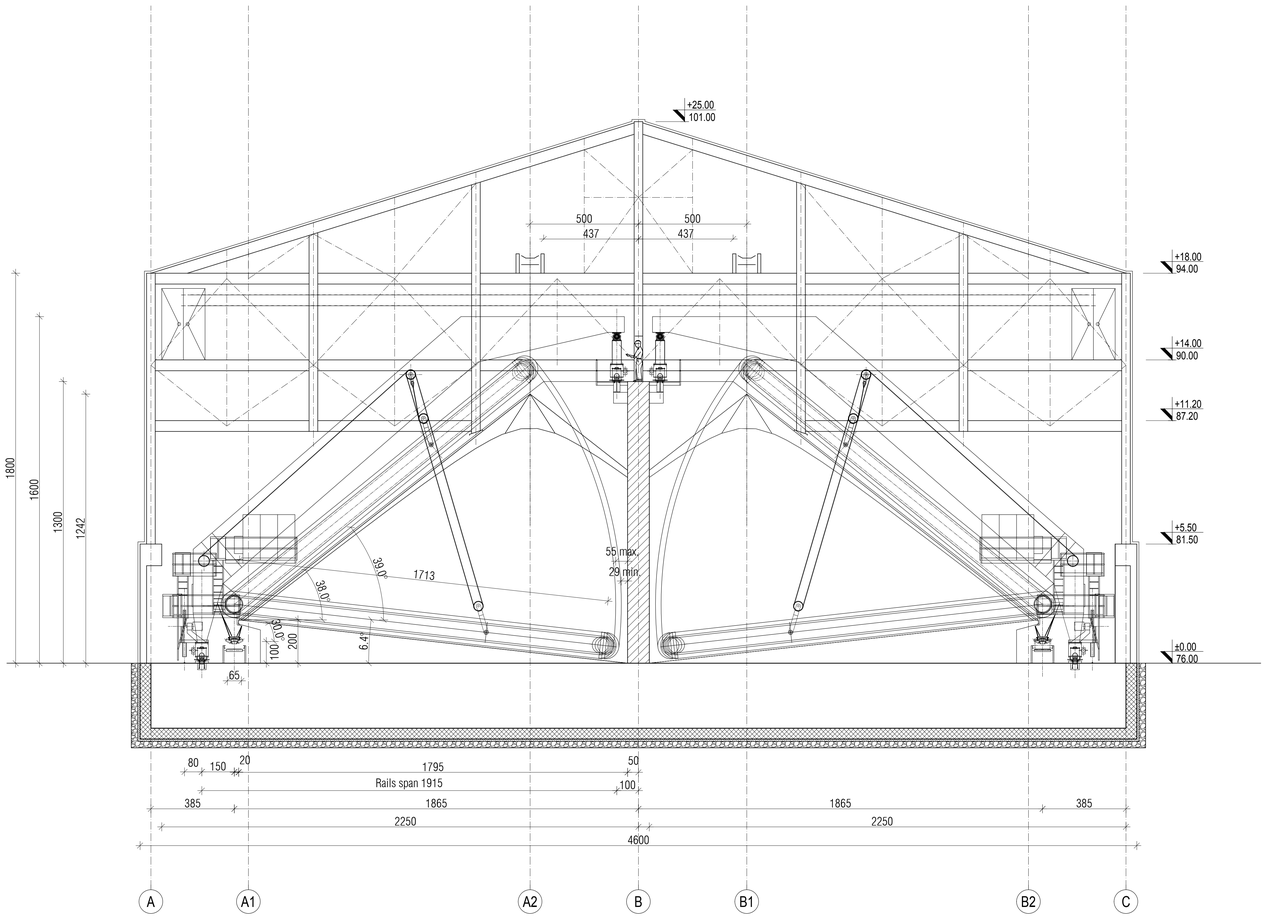

ZGRADA SKLADIŠTENJA KREČNJAKA / LIMESTONE STORAGE BUILDING
PRESEK 2-2 / CROSS-SECTION 2-2

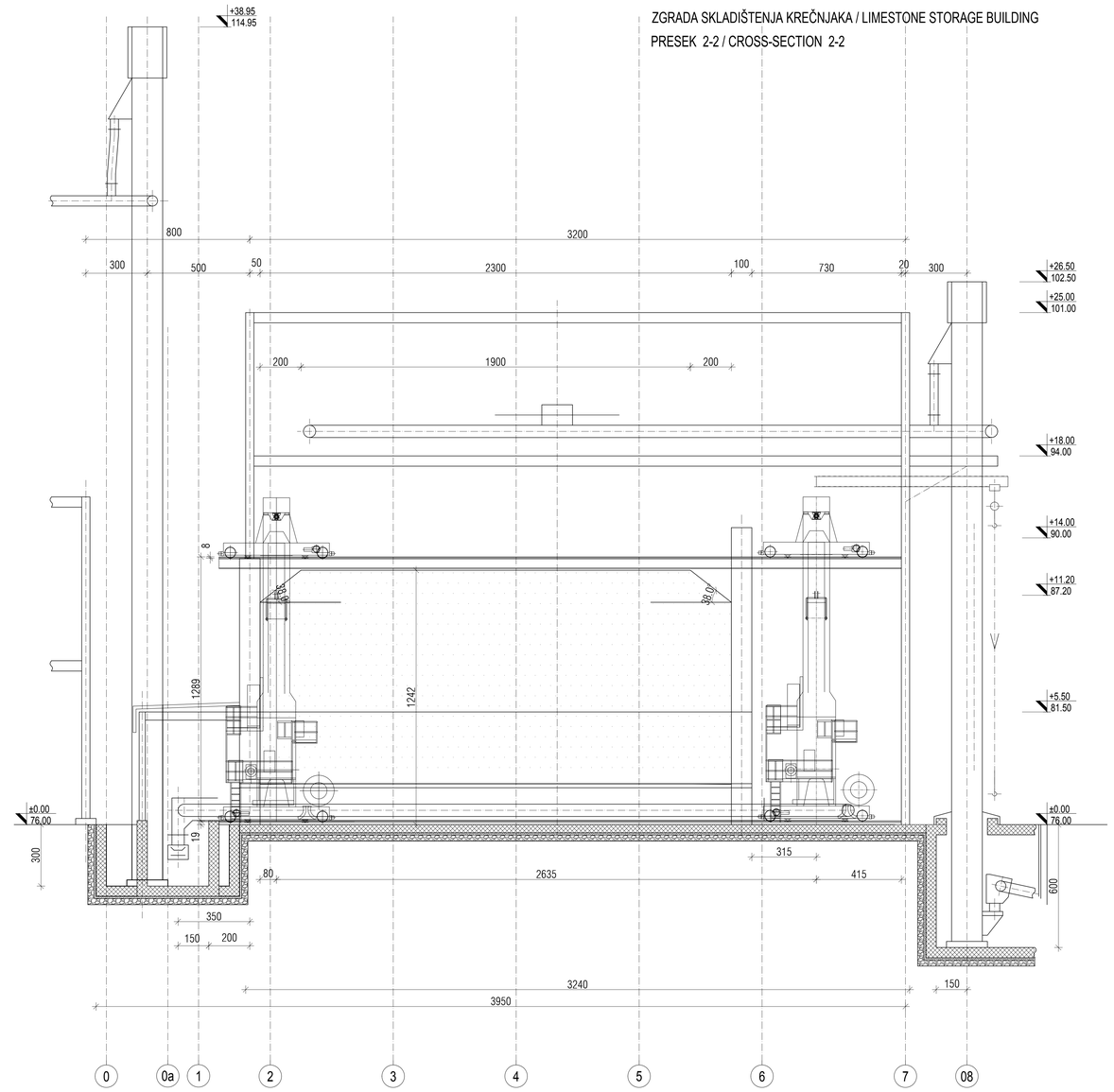

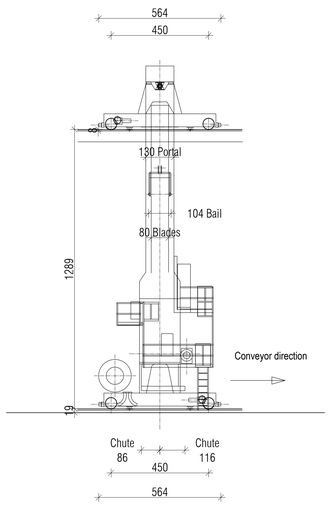

LEGENDA MATERIJALA:

ARMIRANI BETON	REINFORCED CONCRETE
NABIJENI BETON	LEAN CONCRETE
MRŠAVI BETON /TAMPON/	LEAN CONCRETE
GITER BLOK	CLAY BLOCK
PUNA OPEKA	BRICK BLOCK
FASADNI I KROVNI PANEL	FACADES AND ROOF PANEL
MOTAŽNI PREGRADNI ZID OD GK PLOČA	PREFABRICATED WALL PANELS
TERMOIZOLACIJA	THERMAL INSOLATION
HIDROIZOLACIJA	HYDROISOLATION
ŠLJUNAK	GRAVEL
ČELIČNA KONSTRUKCIJA	STEEL CONSTRUCTION
OLUCI	CHAMFER
DROBLJENI KAMEN	GRAVEL
NABIJENA ZEMLJA	HUDDLE GROUND

Rev.	Opis revizije / Revision description	Datum/Date	Crtao/Drawn	Overio/Appr
1				
2				
3				

Broj ugovora / Contract No :12.01.12625/52-17

Konzorcijum: Consortium: MH METAMAHINA d.o.o. BEOGRAD, STOCHO, MH METAMAHINA d.o.o. BEOGRAD, Jedinstvo

delta inženjering
www.deltainzenjering.rs

	Ime i prezime / Name	Potpis/Sign.
Odg. projektant: Respon. designer:	Mirjana Lazić dipl.inž.arh.	
Licence odg.arhi: Res. des. license:	300 4540 03	

Vrsta tehn. dok.: Project type: IDR - Idejno rešenje / IDR - Conceptual design
Datum: Date: 25.01.2018.
Projekcija: Projection:
Deo projekta: Project part: Projekat arhitekture / Architectural Design

Investitor: Client: JP ELEKTROPRIVREDA SRBIJE / PE ELEKTROPRIVREDA SERBIA
Objekat: Complex: Postrojenje za ODG za TE Nikola Tesla A / FGD Construction Project for TPP Nikola Tesla
Podtrojenje: Facility: Zona krečnjaka i gipsa / Limestone and gypsum area
Deo postrojenja: Unit: C22-Zgrada skladištenja krečnjaka / C22-Limestone storage building

Razmera: Scale: 1/100
Naziv crteža: Drawing name: PRESECI 1-1, 2-2 / CROSS SECTIONS 1-1, 2-2
Crtež broj: Drawing number: NTF/GD-S1.0-IDR-1.0.0-C22-003D-rev00
List/col: Page/of: 3/4
Rev.: 1

Mirjana Lazić dipl. inž. arh. 300 4540 03 INŽENJERSKA KOMORA SRBIJE

Generated by AutoCAD 2013 - C:\ACADSTD\NTF-GD-S1.0-IDR-1.0.0-C22-003D-rev00.dwg

REV.	Opis revizije / Revision description
01	
-	
-	

Datum/Date | Crtao/Drawn | Overio/Appr.

Broj ugovora / Contract No :12.01.12625/52-17

Konzorcium:
Consortium:
MITSUBISHI HITACHI POWER SYSTEMS
ITOCHU
MITSUBISHI HITACHI POWER SYSTEMS EUROPE
Jedinstvo

delta inženjering
www.deltainzenjering.rs

	Ime i prezime / Name	Paraf/Sign.
Odg. projektant: Respon. designer:	Mirjana Lazić dipl.inž.arh.	
Licenca odg.proj.: Res. des. license:	300 4540 03	
Vrsta teh. dok.: Project type:	IDR - Idejno rešenje IDR - Conceptual design	
Datum: Date:	25.01.2018.	Projekcija: Projection:
Deo projekta: Project part:	Projekat arhitekture Arhitectural Design	

Investitor:
Client:
JP ELEKTROPRIVREDA SRBIJE
PE ELEKTROPRIVREDA SERBIA

Objekat:
Complex:
Postrojenje za ODG za TE Nikola Tesla A
FGD Construction Project for TPP Nikola Tesla

Postrojenje:
Facility:
Zona krečnjaka i gipsa
Limestone and gypsum area

Deo postrojenja:
Unit:
C22-Zgrada skladištenja krečnjaka
C22-Limestone storage building

Razmera:
Scale:
1/100

Naziv crteža:
Drawing name:
FASADE A, B, C, D
FACADES A, B, C, D

Crtež broj:
Drawing number:
NTFGD-S1.0-IDR-1.0.0-C22-004D-rev00

List/od:
Page/of: 4/4

00

Мирјана Б. Лазић дипл.инж.арх. 300 4540 03 ОДГОВОРНИ ПРОЈЕКТАНТ

Ime fajla / File name: NTFGD-S1.0-IDR-1.0.0-C22-004D-rev00.dwg

ZA.Q.01 - Rev. 3 - 15.05.15.

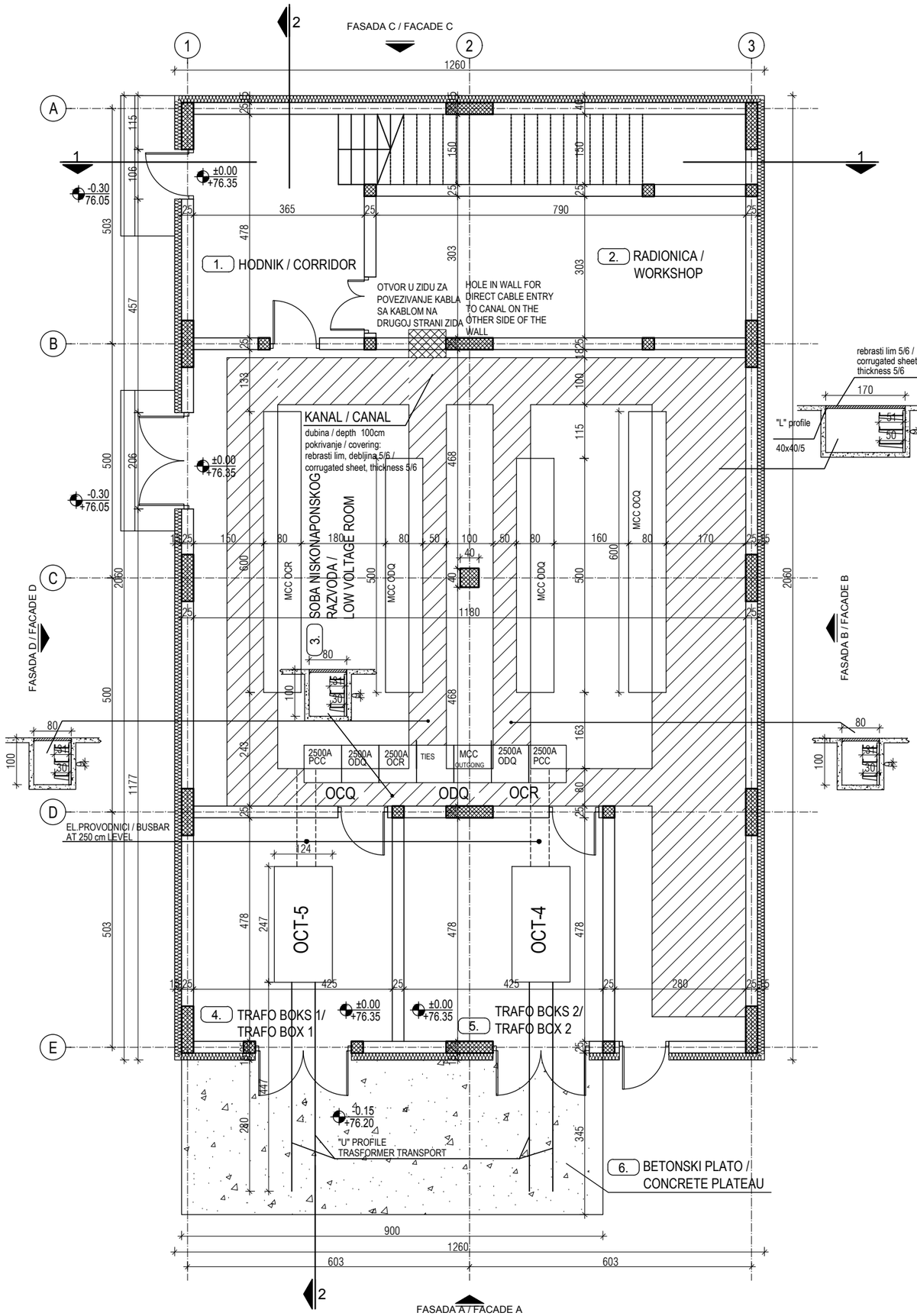

broj / No.	NAMENA PROSTORIJA / ROOMS	površina / area (m²)	obim / perimeter (m')
OSNOVA PRIZEMLJA/GROUND FLOOR ±0.00			
ELEKTRO-KOMANDNA ZGRADA KREČNJAKA I GIPSA / LIMESTONE AND GYPSUM ELECTRICAL BUILDING			
1	HODNIK / CORRIDOR	17.43	16.85
2	RADIONICA / WORKSHOP	23.90	21.85
3	SOBA NISKONAPONSKOG RAZVODA / LOW VOLTAGE ROOM	129.12	53.15
4	TRAFO BOKS 1 / TRAFO BOX 1	20.29	18.05
5	TRAFO BOKS 2 / TRAFO BOX 2	20.29	18.05
6	BETONSKI PLATO / CONCRETE PLATEAU	29.70	
	UKUPNO / TOTAL:	211.03	
	NETO POVRŠINA PRIZEMLJA / NETO AREA GROUND FLOOR:	211.03	
	BRUTO POVRŠINA PRIZEMLJA / BRUTO AREA GROUND FLOOR:	259.56	
	BRGP / GBA:	548.82	
	POVRŠINA HORIZONTALNE PROJEKCIJE KROVA / AREA HORIZONTAL PROJECTIONS OF THE ROOF:	260.89	

OSNOVA PRIZEMLJA ±0.00
ELEKTRO-KOMANDNA ZGRADA KREČNJAKA I GIPSA
GROUND FLOOR PLAN ±0.00
LIMESTONE AND GYPSUM ELECTRICAL BUILDING/

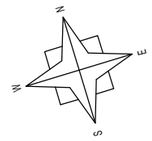

LEGENDA MATERIJALA:	LEGEND:
ARMIRANI BETON	REINFORCED CONCRETE
NABIJENI BETON	LEAN CONCRETE
MRŠAVI BETON /TAMPON/	LEAN CONCRETE
GITER BLOK	CLAY BLOCK
PUNA OPEKA	BRICK BLOCK
FASADNI I KROVNI PANEL	FACADES AND ROOF PANEL
MOTAŽNI PREGRADNI ZID OD GK PLOČA	PREFABRICATED WALL PANELS
TERMOIZOLACIJA	THERMAL INSOLATION
HIDROIZOLACIJA	HYDROISOLATION
ŠLJUNAK	GRAVEL
ČELIČNA KONSTRUKCIJA	STEEL CONSTRUCTION
OLUCI	CHAMFER
DROBLJENI KAMEN	GRAVEL
NABIJENA ZEMLJA	HUDDLE GROUND

ИНЖЕЊЕРСКА КОМОРА СРБИЈЕ
Мирјана Б. Лазић
дипл.инж.арх.
300 4540 03
ОВЛАШЋЕНИ ПРОЈЕКТАНТ

REV.	Opis revizije / Revision description	Datum/Date	Crtao/Drawn	Overio/Appr.
-				
-				
01	Promena pečata i orijentacije objekta / Changed title block, different object orientation	25.01.2018.	I. Ilić, inž.arh.	

Broj ugovora / Contract No :12.01.12625/52-17

Konzorcium:
Consortium:

MITSUBISHI HITACH POWER SYSTEMS · ITOCHU · MITSUBISHI HITACH POWER SYSTEMS EUROPE · Jedinstvo

delta inženjering
www.deltainzenjering.rs

	Ime i prezime / Name	Paraf/Sign.
Odg. projektant: Respon. designer:	Mirjana Lazić dipl.inž.arh.	
Licenca odg.proj.: Res. des. license:	300 4540 03	
Vrsta teh. dok.: Project type:	IDR - Idejno rešenje / IDR - Conceptual design	
Datum: Date:	25.01.2018.	Projekcija: Projection:
Deo projekta: Project part:	Projekat arhitekture / Arhitectural Design	

Investitor: Client: JP ELEKTROPRIVREDA SRBIJE / PE ELEKTROPRIVREDA SERBIA

Objekat: Complex: Postrojenje za ODG za TE Nikola Tesla A / FGD Construction Project for TPP Nikola Tesla

Postrojenje: Facility: Zona krečnjaka i gipsa / Limestone and gypsum area

Deo postrojenja: Unit: C23-Elektro-komandna zgrada krečnjaka i gipsa / C23-Limestone and gypsum electrical building

Razmera: Scale: **1/100**

Naziv crteža: Drawing name: OSNOVA PRIZEMLJA / GROUND FLOOR PLAN

Crtež broj: Drawing number: **NTFGD-S1.0-IDR-1.0.0-C23-001D-rev00**

List/od: Page/of: **1/6**

Rev. 01

Ime fajla / File name: NTFGD-S1.0-IDR-1.0.0-C23-rev00.dwg

ZA.Q.01 - Rev. 3 - 15.05.15.

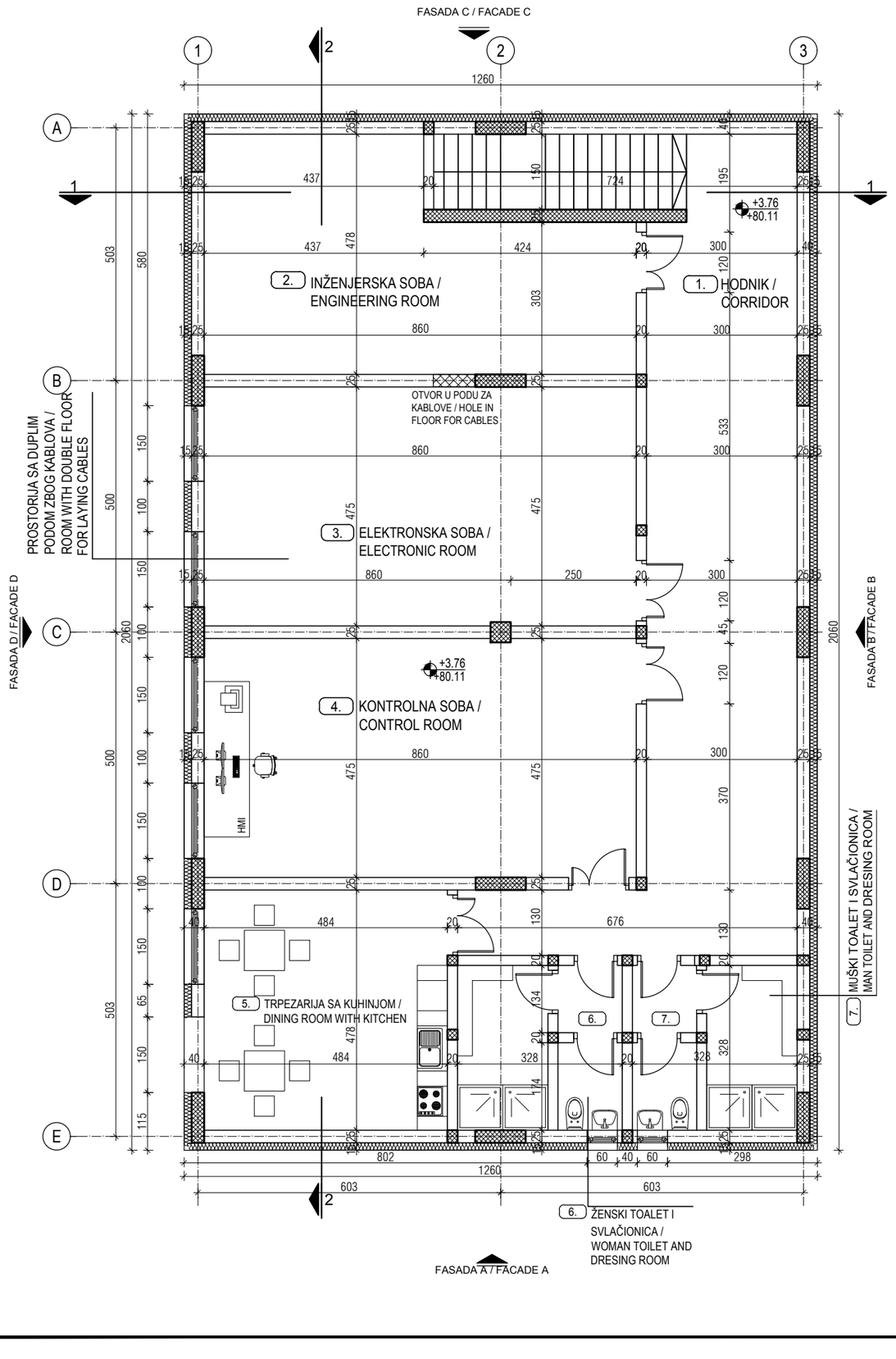

broj / No.	NAMENA PROSTORIJA / ROOMS	površina / area (m²)	obim / perimeter (m')
OSNOVA I SPRATA/FIRST FLOOR PLAN +3.76 ELEKTRO-KOMANDNA ZGRADA KREČNJAKA I GIPSA / LIMESTONE AND GYPSUM ELEKTRICAL BUILDING			
1	HODNIK / CORRIDOR	51.74	45.05
2	INŽENJERSKA SOBA / ENGINEERING ROOM	33.66	26.75
3	ELEKTRONSKA SOBA / ELECTRONIC ROOM	40.85	26.70
4	KONTROLNA SOBA / CONTROL ROOM	40.85	26.70
5	TRPEZARIJA SA KUHINJOM / DINING ROOM WITH KITCHEN	23.11	19.23
6	ŽENSKI TOALET I SVLAČIONICA / WOMAN TOILET AND DRESING ROOM	9.83	21.41
7	MUŠKI TOALET I SVLAČIONICA / MAN TOILET AND DRESING ROOM	9.83	21.41
	UKUPNO / TOTAL:	209.87	
	NETO POVRŠINA I SPRATA / NETO AREA I FLOOR:	209.87	
	BRUTO POVRŠINA I SPRATA/BRUTO AREA I FLOOR:	259.56	
	BRGP / GBA:	548.82	
	POVRŠINA HORIZONTALNE PROJEKCIJE KROVA / AREA HORIZONTAL PROJECTIONS OF THE ROOF:	260.89	

OSNOVA 1.SPRATA +3.76
ELEKTRO-KOMANDNA ZGRADA KREČNJAKA I GIPSA
FIRST FLOOR PLAN +3.76
LIMESTONE AND GYPSUM ELECTRICAL BUILDING

LEGENDA MATERIJALA:	LEGEND:
ARMIRANI BETON	REINFORCED CONCRETE
NABIJENI BETON	LEAN CONCRETE
MRŠAVI BETON /TAMPON/	LEAN CONCRETE
GITER BLOK	CLAY BLOCK
PUNA OPEKA	BRICK BLOCK
FASADNI I KROVNI PANEL	FACADES AND ROOF PANEL
MOTAŽNI PREGRADNI ZID OD GK PLOČA	PREFABRICATED WALL PANELS
TERMOIZOLACIJA	THERMAL INSOLATION
HIDROIZOLACIJA	HYDROISOLATION
ŠLJUNAK	GRAVEL
ČELIČNA KONSTRUKCIJA	STEEL CONSTRUCTION
OLUCI	CHAMFER
DROBLJENI KAMEN	GRAVEL
NABIJENA ZEMLJA	HUDDLE GROUND

Инжењерска комора Србије
Мирјана Б. Лазић
дипл.инж.арх.
300 4540 03
Овлашћени пројектант

REV.	Opis revizije / Revision description	Datum/Date	Crtao/Drawn	Overio/Appr.
-				
-				
01	Promena pečata i orijentacije objekta / Changed title block, different object orientation	25.01.2018.	I. Ilić, inž.arh.	

Broj ugovora / Contract No :12.01.12625/52-17

Konzorcium:
Consortium:
MITSUBISHI HITACHI POWER SYSTEMS · ITOCHU · MITSUBISHI HITACHI POWER SYSTEMS EUROPE · Jedinstvo

delta inženjering
www.deltainzenjering.rs

	Ime i prezime / Name	Paraf/Sign.
Odg. projektant: Respon. designer:	Mirjana Lazić dipl.inž.arh.	
Licenca odg.proj.: Res. des. license:	300 4540 03	
Vrsta teh. dok.: Project type:	IDR - Idejno rešenje / IDR - Conceptual design	
Datum: Date:	25.01.2018.	Projekcija: Projection:
Deo projekta: Project part:	Projekat arhitekture / Arhitectural Design	

Investitor: Client: JP ELEKTROPRIVREDA SRBIJE / PE ELEKTROPRIVREDA SERBIA
Objekat: Complex: Postrojenje za ODG za TE Nikola Tesla A / FGD Construction Project for TPP Nikola Tesla
Postrojenje: Facility: Zona krečnjaka i gipsa / Limestone and gypsum area
Deo postrojenja: Unit: C23-Elektro-komandna zgrada krečnjaka i gipsa / C23-Limestone and gypsum electrical building

Razmera: Scale:	Naziv crteža: Drawing name:	Crtež broj: Drawing number:	List/od: Page/of:
1/100	OSNOVA 1.SPRATA / FIRST FLOOR PLAN	NTFGD-S1.0-IDR-1.0.0-C23-002D-rev00	2/6
			Rev. 01

Ime fajla / File name: NTFGD-S1.0-IDR-1.0.0-C23-rev00.dwg

ZA.Q.01 - Rev. 3 - 15.05.15.

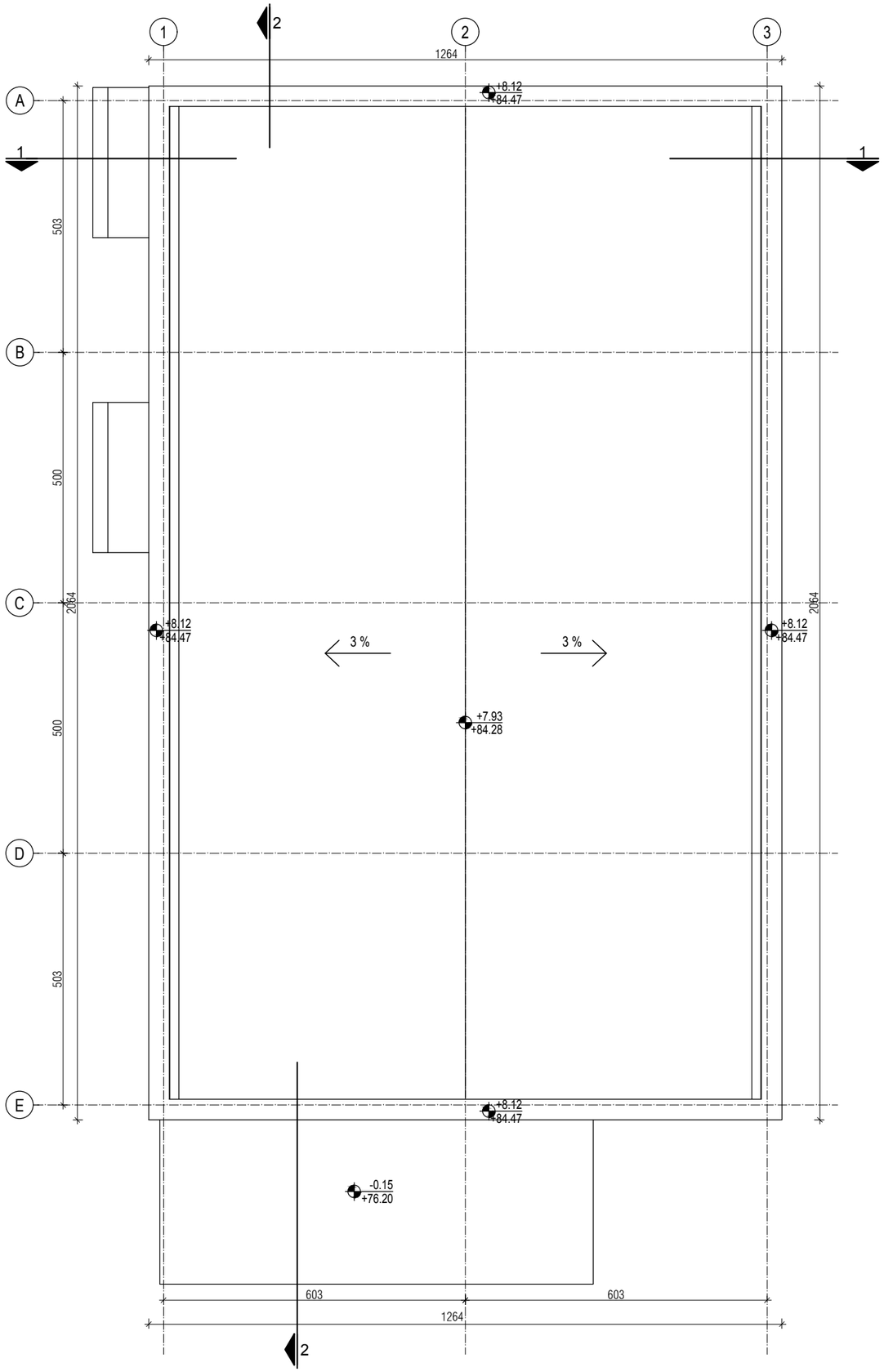

OSNOVA KROVNIH RAVNI +7.93
ELEKTRO-KOMANDNA ZGRADA KREČNJAKA I GIPSA
ROOF PLAN +7.93
LIMESTONE AND GYPSUM ELECTRICAL BUILDING

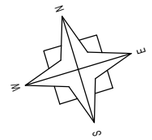

broj / No.	NAMENA PROSTORIJA / ROOMS	površina / area (m²)	obim / perimeter (m')
OSNOVA KROVNIH RAVNI /ROOF PLAN +7.93			
ELEKTRO-KOMANDNA ZGRADA KREČNJAKA I GIPSA / LIMESTONE AND GYPSUM ELECTRICAL BUILDING			
	BRGP / GBA:	548.82	
	POVRŠINA HORIZONTALNE PROJEKCIJE KROVA / AREA HORIZONTAL PROJECTIONS OF THE ROOF:	260.89	

LEGENDA MATERIJALA:	LEGEND:
ARMIRANI BETON	REINFORCED CONCRETE
NABIJENI BETON	LEAN CONCRETE
MRŠAVI BETON /TAMPON/	LEAN CONCRETE
GITER BLOK	CLAY BLOCK
PUNA OPEKA	BRICK BLOCK
FASADNI I KROVNI PANEL	FACADES AND ROOF PANEL
MOTAŽNI PREGRADNI ZID OD GK PLOČA	PREFABRICATED WALL PANELS
TERMOIZOLACIJA	THERMAL INSOLATION
HIDROIZOLACIJA	HYDROISOLATION
ŠLJUNAK	GRAVEL
ČELIČNA KONSTRUKCIJA	STEEL CONSTRUCTION
OLUCI	CHAMFER
DROBLJENI KAMEN	GRAVEL
NABIJENA ZEMLJA	HUDDLE GROUND

ИНЖЕЊЕРСКА КОМОРА СРБИЈЕ
Мирјана Б. Лазић
дипл.инж.арх.
300 4540 03
ОДГОВОРНИ ПРОЈЕКТАНТ

REV.	Opis revizije / Revision description	Datum/Date	Crtao/Drawn	Overio/Appr.
-				
-				
01	Promena pečata i orijentacije objekta / Changed title block, different object orientation	25.01.2018.	I. Ilić, inž.arh.	

Broj ugovora / Contract No :12.01.12625/52-17

Konzorcium:
Consortium:

MITSUBISHI HITACHI POWER SYSTEMS | ITOCHU | MITSUBISHI HITACHI POWER SYSTEMS EUROPE | Jedinstvo

delta inženjering
www.deltainzenjering.rs

	Ime i prezime / Name	Paraf/Sign.
Odg. projektant: Respon. designer:	Mirjana Lazić dipl.inž.arh.	
Licenca odg.proj.: Res. des. license:	300 4540 03	

Vrsta teh. dok.: Project type: IDR - Idejno rešenje / IDR - Conceptual design

Datum: Date: 25.01.2018. Projekcija: Projection:

Deo projekta: Project part: Projekat arhitekture / Arhitectural Design

Investitor: Client: JP ELEKTROPRIVREDA SRBIJE / PE ELEKTROPRIVREDA SERBIA

Objekat: Complex: Postrojenje za ODG za TE Nikola Tesla A / FGD Construction Project for TPP Nikola Tesla

Postrojenje: Facility: Zona krečnjaka i gipsa / Limestone and gypsum area

Deo postrojenja: Unit: C23-Elektro-komandna zgrada krečnjaka i gipsa / C23-Limestone and gypsum electrical building

Razmera: Scale: **1/100**

Naziv crteža: Drawing name: OSNOVA KROVNIH RAVNI / ROOF PLAN

Crtež broj: Drawing number: **NTFGD-S1.0-IDR-1.0.0-C23-003D-rev00**

List/od: Page/of: **3/6**

Rev. 01

Ime fajla / File name: NTFGD-S1.0-IDR-1.0.0-C23-rev00.dwg

ZA.Q.01 - Rev. 3 - 15.05.15.

PRESEK 2-2 / SECTION 2-2

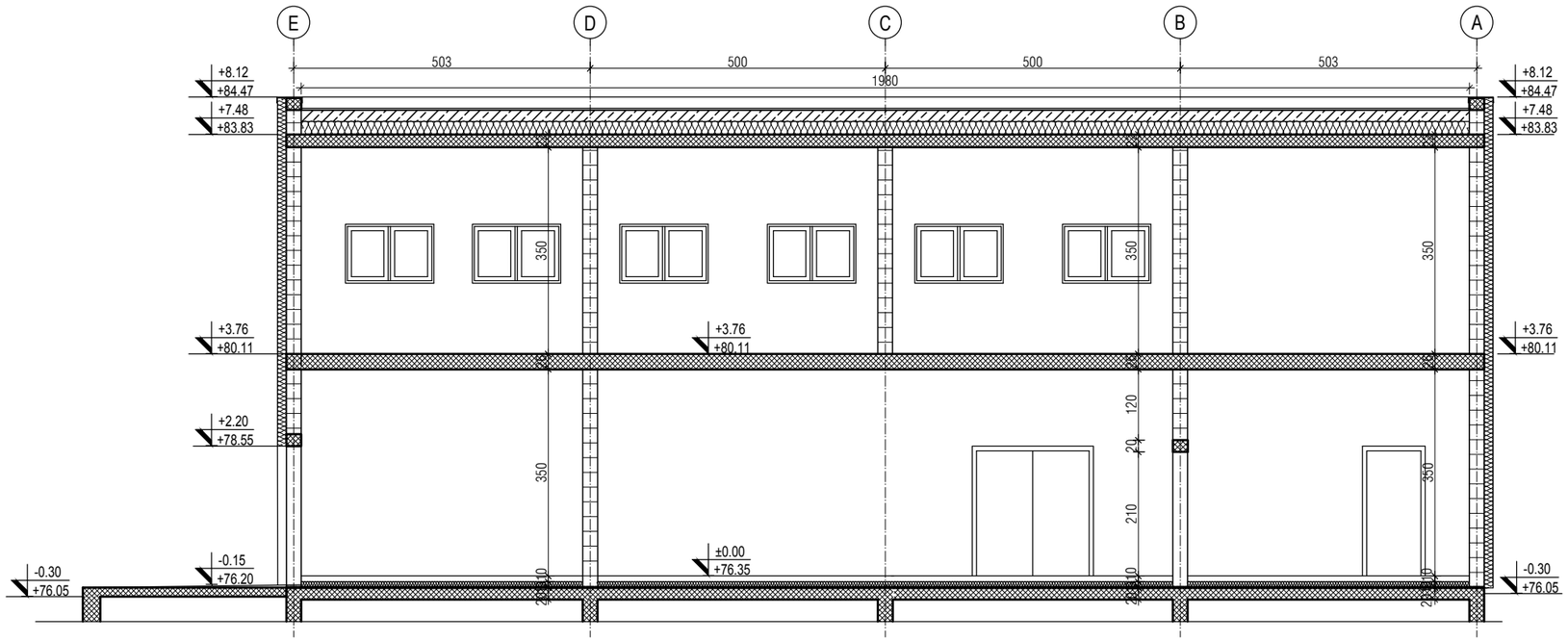

PRESECI 1-1, 2-2
ELEKTRO-KOMANDNA ZGRADA KREČNJAKA I GIPSA
CROSS SECTION 1-1, 2-2
LIMESTONE AND GYPSUM ELECTRICAL BUILDING

LEGENDA MATERIJALA:	LEGEND:
ARMIRANI BETON	REINFORCED CONCRETE
NABIJENI BETON	LEAN CONCRETE
MRŠAVI BETON /TAMPON/	LEAN CONCRETE
GITER BLOK	CLAY BLOCK
PUNA OPEKA	BRICK BLOCK
FASADNI I KROVNI PANEL	FACADES AND ROOF PANEL
MOTAŽNI PREGRADNI ZID OD GK PLOČA	PREFABRICATED WALL PANELS
TERMOIZOLACIJA	THERMAL INSOLATION
HIDROIZOLACIJA	HYDROISOLATION
ŠLJUNAK	GRAVEL
ČELIČNA KONSTRUKCIJA	STEEL CONSTRUCTION
OLUCI	CHAMFER
DROBLJENI KAMEN	GRAVEL
NABIJENA ZEMLJA	HUDDLE GROUND

POPREČNI PRESEK 1-1 / CROSS SECTION 1-1

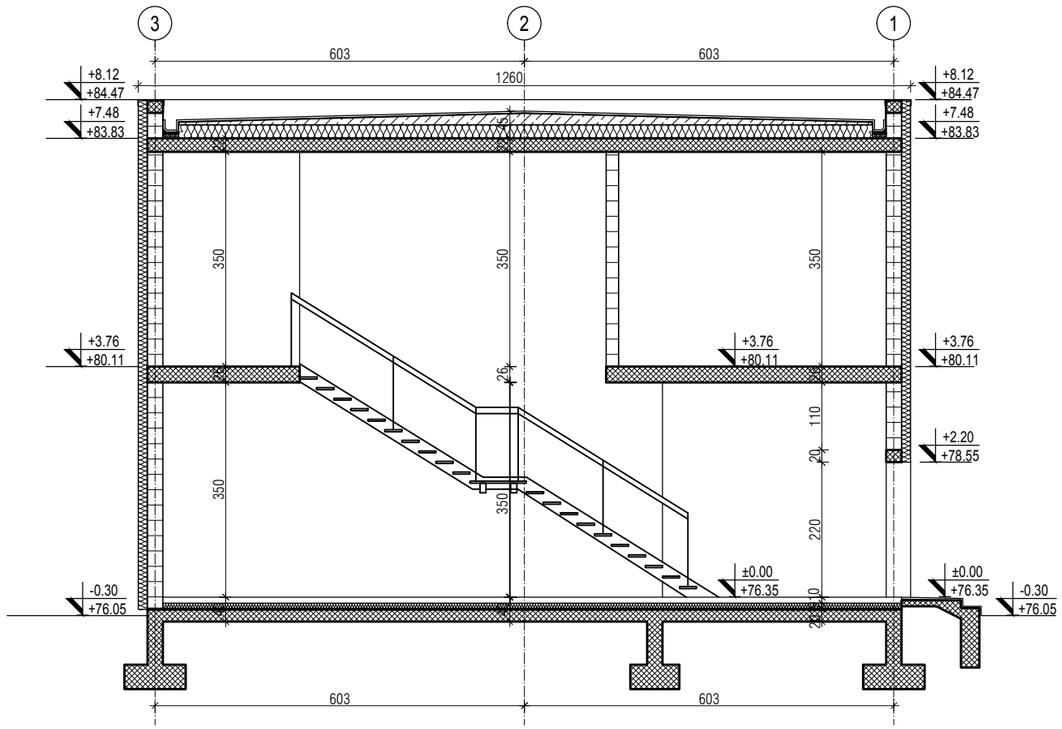

REV.	Opis revizije / Revision description	Datum/Date	Crtao/Drawn	Overio/Appr.
-				
-				
01	Promena pečata i orijentacije objekta / Changed title block, different object orientation	25.01.2018.	I. Ilić, inž.arh.	

Broj ugovora / Contract No :12.01.12625/52-17

Konzorcium:
Consortium:

delta inženjering
www.deltainzenjering.rs

	Ime i prezime / Name	Paraf/Sign.
Odg. projektant: Respon. designer:	Mirjana Lazić dipl.inž.arh.	
Licenca odg.proj.: Res. des. license:	300 4540 03	
Vrsta teh. dok.: Project type:	IDR - Idejno rešenje IDR - Conceptual design	
Datum: Date:	25.01.2018.	Projekcija: Projection:
Deo projekta: Project part:	Projekat arhitekture Arhitectural Design	

Investitor: Client: JP ELEKTROPRIVREDA SRBIJE
PE ELEKTROPRIVREDA SERBIA

Objekat: Complex: Postrojenje za ODG za TE Nikola Tesla A
FGD Construction Project for TPP Nikola Tesla

Postrojenje: Facility: Zona krečnjaka i gipsa
Limestone and gypsum area

Deo postrojenja: Unit: C23-Elektro-komandna zgrada krečnjaka i gipsa
C23-Limestone and gypsum electrical building

Razmera: Scale: **1/100**

Naziv crteža: Drawing name: PRESECI 1-1, 2-2
CROSS SECTIONS 1-1, 2-2

Crtež broj: Drawing number: **NTFGD-S1.0-IDR-1.0.0-C23-004D-rev00**

List/od: Page/of: **4/6**

Rev. 01

ИНЖЕЊЕРСКА КОМОРА СРБИЈЕ
Мирјана Б. Лазић
дипл.инж.арх.
300 4540 03
ОВЛАШЋЕНИ ПРОЈЕКТАНТ

Ime fajla / File name: NTFGD-S1.0-IDR-1.0.0-C23-rev00.dwg

ZA.Q.01 - Rev. 3 - 15.05.15.

FASADA B / FACADE B

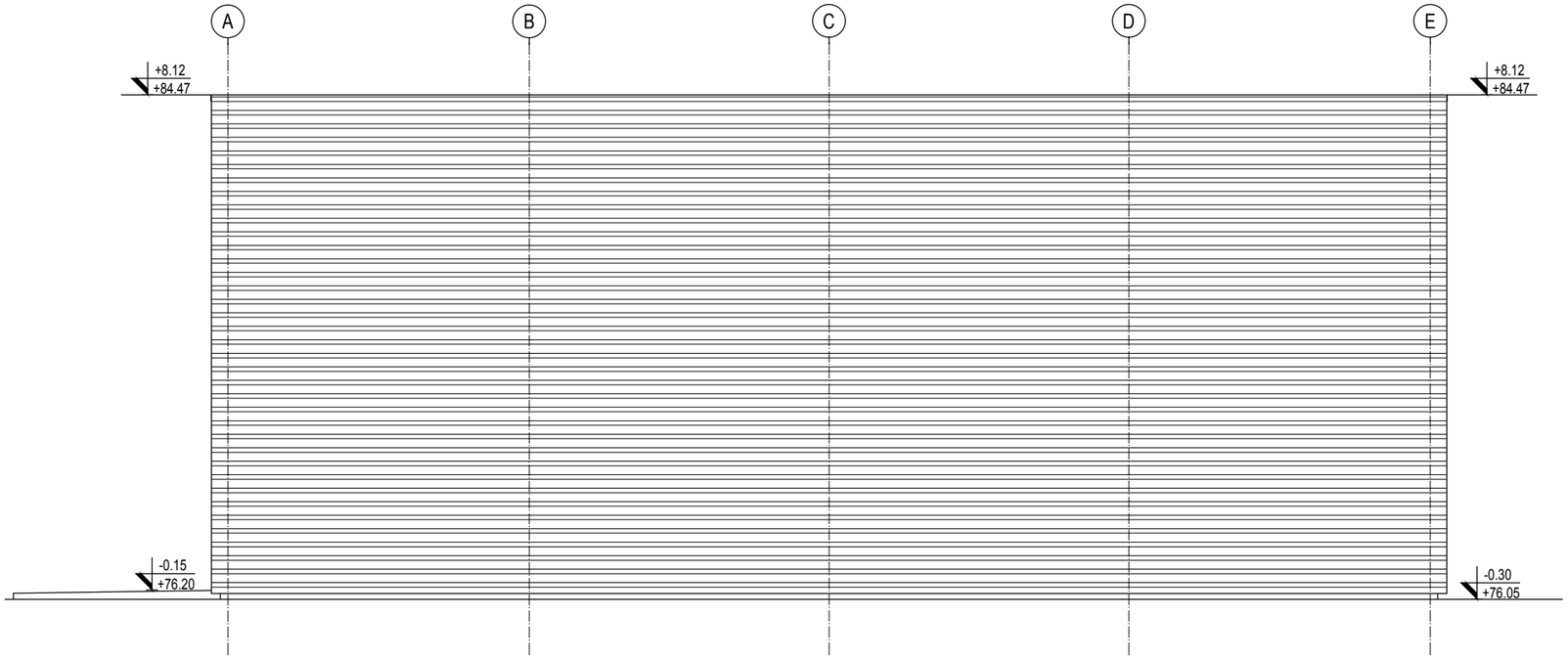

FASADA A / FACADE A

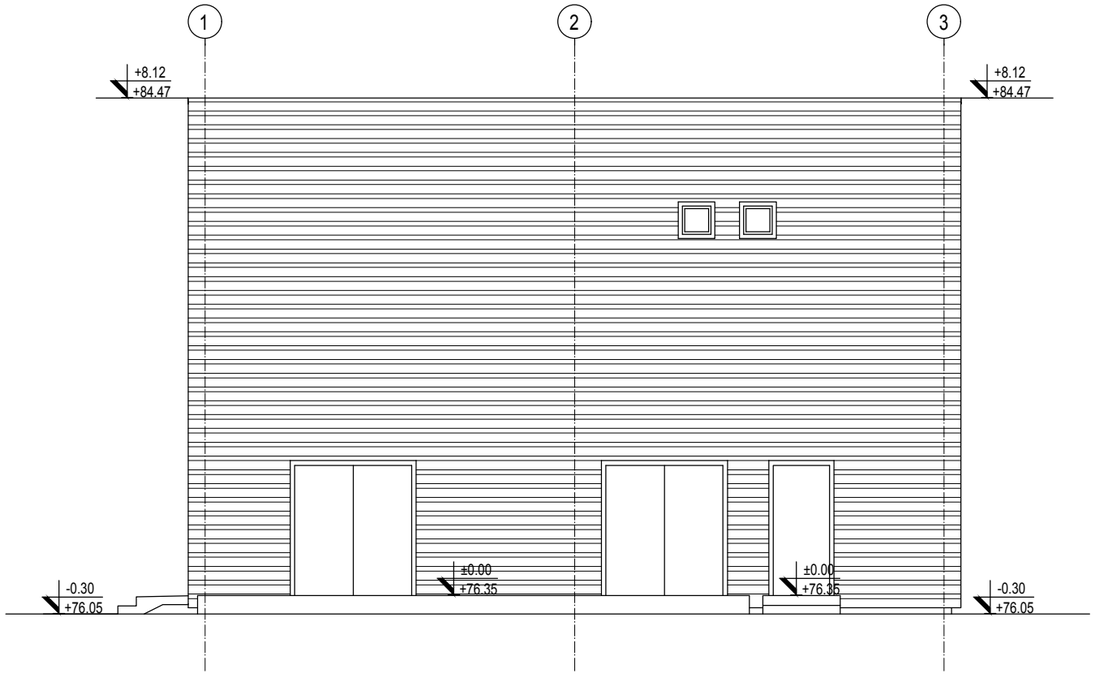

FASADE A, B
ELEKTRO-KOMANDNA ZGRADA KREČNJAKA I GIPSA

FACADES A, B
LIMESTONE AND GYPSUM ELECTRICAL BUILDING

ИНЖЕЊЕРСКА КОМОРА СРБИЈЕ
Мирјана Б. Лазић
дипл.инж.арх.
300 4540 03
ОВЛАШЋЕНИ ПРОЈЕКТАНТ

REV.	Opis revizije / Revision description	Datum/Date	Crtao/Drawn	Overio/Appr.
-				
-				
01	Promena pečata i orijentacije objekta / Changed title block, different object orientation	25.01.2018.	I. Ilić, inž.arh.	

Broj ugovora / Contract No :12.01.12625/52-17

Konzorcium:
Consortium:

MITSUBISHI HITACHI POWER SYSTEMS · ITOCHU · MITSUBISHI HITACHI POWER SYSTEMS EUROPE · Jedinstvo

delta inženjering
www.deltainzenjering.rs

	Ime i prezime / Name	Paraf/Sign.
Odg. projektant: Respon. designer:	Mirjana Lazić dipl.inž.arh.	
Licenca odg.proj.: Res. des. license:	300 4540 03	

Vrsta teh. dok.: Project type: IDR - Idejno rešenje / IDR - Conceptual design

Datum: Date: 25.01.2018. Projekcija: Projection:

Deo projekta: Project part: Projekat arhitekture / Arhitectural Design

Investitor: Client: JP ELEKTROPRIVREDA SRBIJE / PE ELEKTROPRIVREDA SERBIA

Objekat: Complex: Postrojenje za ODG za TE Nikola Tesla A / FGD Construction Project for TPP Nikola Tesla

Postrojenje: Facility: Zona krečnjaka i gipsa / Limestone and gypsum area

Deo postrojenja: Unit: C23-Elektro-komandna zgrada krečnjaka i gipsa / C23-Limestone and gypsum electrical building

Razmera: Scale: **1/100**

Naziv crteža: Drawing name: FASADE A, B / FACADES A, B

Crtež broj: Drawing number: **NTFGD-S1.0-IDR-1.0.0-C23-005D-rev00**

List/od: Page/of: **5/6**

Rev. 01

Ime fajla / File name: NTFGD-S1.0-IDR-1.0.0-C23-rev00.dwg

ZA.Q.01 - Rev. 3 - 15.05.15.

FASADA B / FACADE B

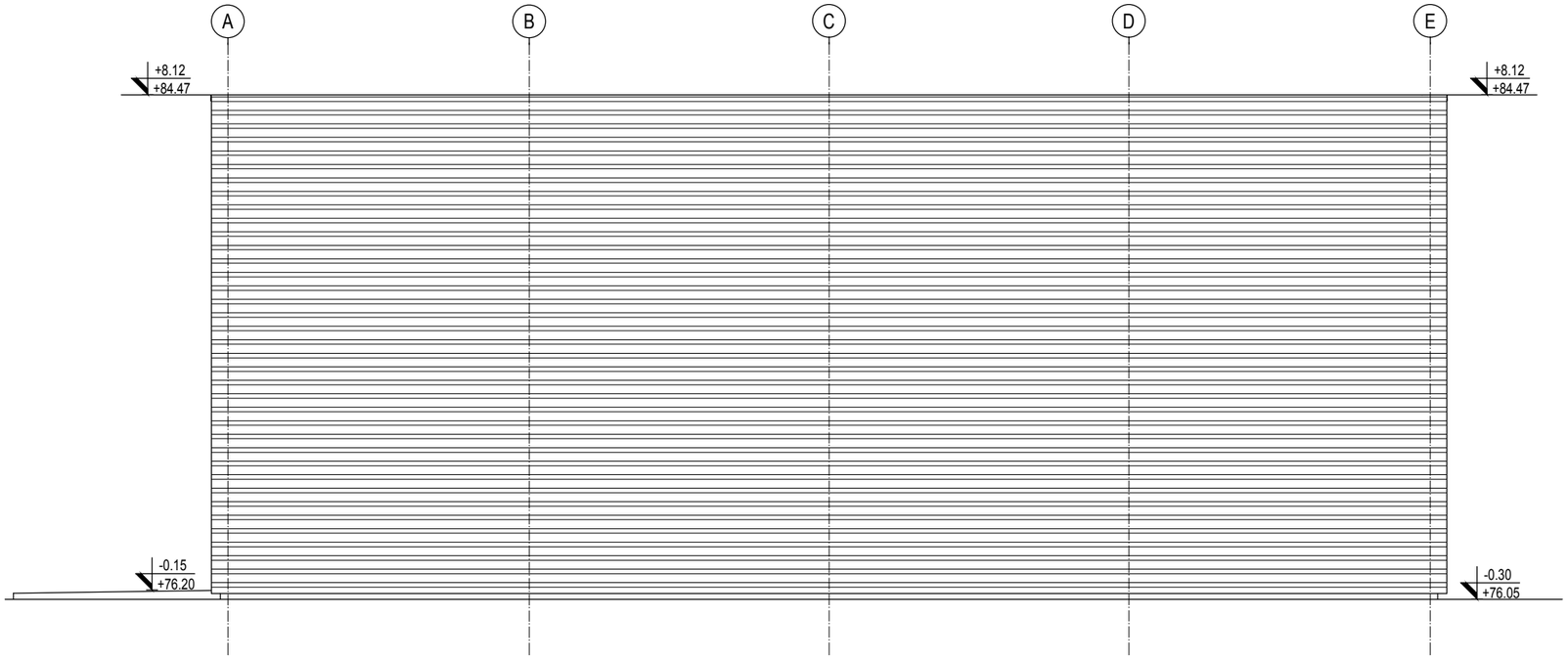

FASADA A / FACADE A

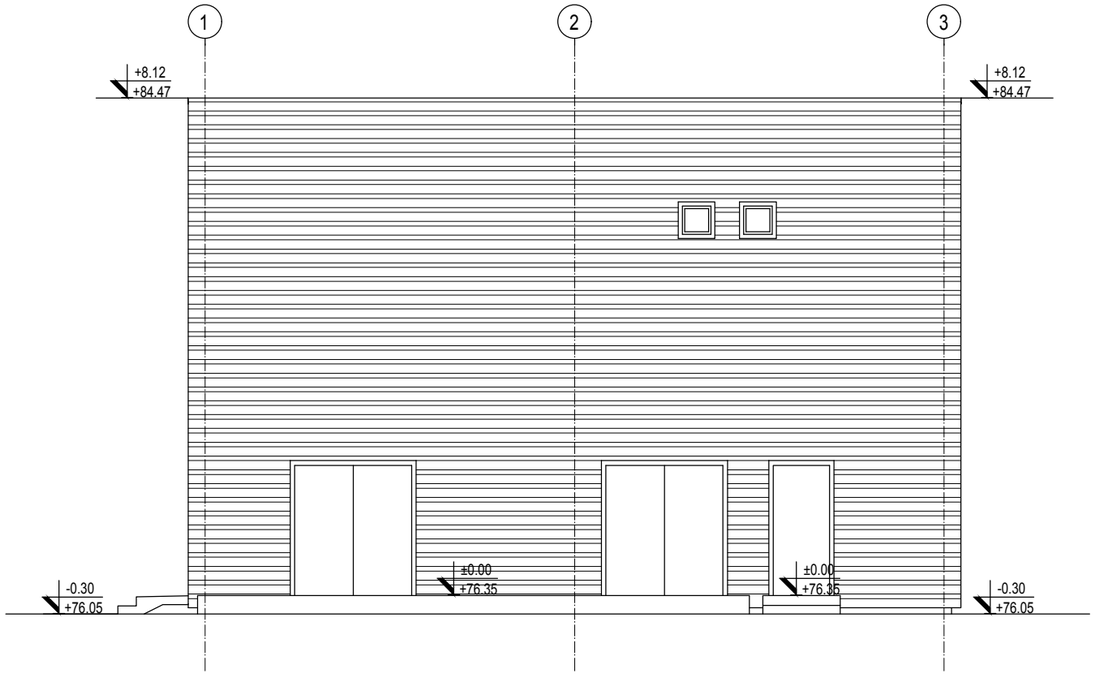

FASADE A, B
ELEKTRO-KOMANDNA ZGRADA KREČNJAKA I GIPSA

FACADES A, B
LIMESTONE AND GYPSUM ELECTRICAL BUILDING

REV.	Opis revizije / Revision description	Datum/Date	Crtao/Drawn	Overio/Appr.
-				
-				
01	Promena pečata i orijentacije objekta / Changed title block, different object orientation	25.01.2018.	I. Ilić, inž.arh.	

Broj ugovora / Contract No :12.01.12625/52-17

Konzorcium:
Consortium:

MITSUBISHI HITACHI POWER SYSTEMS · ITOCHU · MITSUBISHI HITACHI POWER SYSTEMS EUROPE · Jedinstvo

delta inženjering
www.deltainzenjering.rs

	Ime i prezime / Name	Paraf/Sign.
Odg. projektant: Respon. designer:	Mirjana Lazić dipl.inž.arh.	
Licenca odg.proj.: Res. des. license:	300 4540 03	

Vrsta teh. dok.: Project type: IDR - Idejno rešenje / IDR - Conceptual design

Datum: Date: 25.01.2018. Projekcija: Projection:

Deo projekta: Project part: Projekat arhitekture / Arhitectural Design

Investitor: Client: JP ELEKTROPRIVREDA SRBIJE / PE ELEKTROPRIVREDA SERBIA

Objekat: Complex: Postrojenje za ODG za TE Nikola Tesla A / FGD Construction Project for TPP Nikola Tesla

Postrojenje: Facility: Zona krečnjaka i gipsa / Limestone and gypsum area

Deo postrojenja: Unit: C23-Elektro-komandna zgrada krečnjaka i gipsa / C23-Limestone and gypsum electrical building

Razmera: Scale: **1/100**

Naziv crteža: Drawing name: FASADE C, D / FACADES C, D

Crtež broj: Drawing number: **NTFGD-S1.0-IDR-1.0.0-C23-006D-rev00**

List/od: Page/of: **6/6**

Rev. 01

Inženjerska komora Srbije — Mirjana B. Lazić, dipl.inž.arh., 300 4540 03, Odgovorni projektant

Ime fajla / File name: NTFGD-S1.0-IDR-1.0.0-C23-rev00.dwg

ZA.Q.01 - Rev. 3 - 15.05.15.

OBJEKAT MLEVENJA KREČNJAKA / LIMESTONE MILL BUILDING
OSNOVA PRIZEMLJA A (+-0,00) / GROUND FLOOR A (+-0,00)

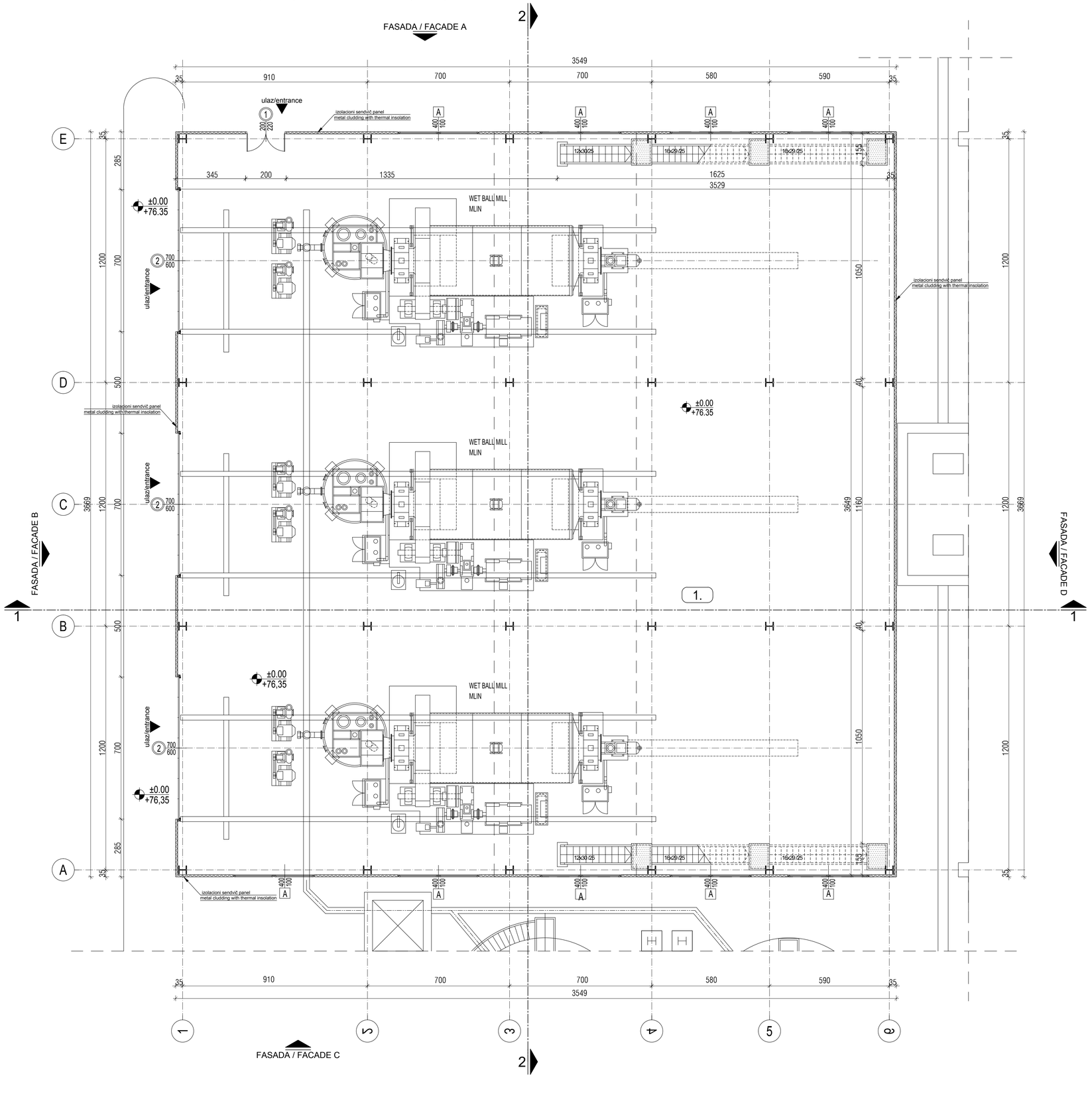

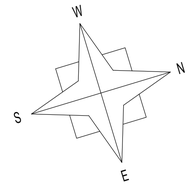

broj / No.	NAMENA PROSTORIJA / ROOMS	površina / area (m²)	obim / perimeter (m')
OSNOVA PRIZEMLJA A (+-0,00) / GROUND FLOOR A			
OBJEKAT MLEVENJA KREČNJAKA / LIMESTONE MILL BUILDING			
1	PROSTOR MLINA KRECNJAKA / AREA OF LIMESTONE MILL	1288,4	144,4
	UKUPNO / TOTAL:	1288,4	
	NETO POVRŠINA OSNOVE A / NETO AREA A:	1288,4	
	BRUTO POVRŠINA OSNOVE A / BRUTO AREA FLOOR A:	1302,9	
	BRGP / GBA:	2040,6	
	POVRŠINA HORIZONTALNE PROJEKCIJE KROVA / AREA HORIZONTAL PROJECTION OF THE ROOF:	1331,9	
	POVRSINA SPOLJASNJEG PROSTORA	1117,0 m2	

LEGENDA MATERIJALA / LEGEND:

ARMIRANI BETON	REINFORCED CONCRETE
NABIJENI BETON	LEAN CONCRETE
MRŠAVI BETON /TAMPON/	LEAN CONCRETE
GITER BLOK	CLAY BLOCK
PUNA OPEKA	BRICK BLOCK
FASADNI I KROVNI PANEL	FACADES AND ROOF PANEL
MOTAŽNI PREGRADNI ZID OD GK PLOČA	PREFABRICATED WALL PANELS
TERMOIZOLACIJA	THERMAL INSOLATION
HIDROIZOLACIJA	HYDROISOLATION
ŠLJUNAK	GRAVEL
ČELIČNA KONSTRUKCIJA	STEEL CONSTRUCTION
OLUCI	CHAMFER
DROBLJENI KAMEN	GRAVEL
NABIJENA ZEMLJA	HUDDLE GROUND

REV.	Opis revizije / Revision description	Datum/Date	Crtao/Drawn	Overio/Appr.
1				
2				
3				

Broj ugovora / Contract No :12.01.12625/52-17

Konzorcijum: Consortium: MHPS MITSUBISHI HITACHI POWER SYSTEMS; STOCHO; MHPS MITSUBISHI HITACHI POWER SYSTEMS DANMARK; Jedinstvo

delta inženjering
www.deltainzenjering.rs

	Ime i prezime / Name	Potpis/Sign.
Odg. projektant: Respon. designer:	Mirjana Lazić dipl.inž.arh.	
Licenca odg.proj.: Res. des. license:	300 4540 03	

Vrsta teh. dok.: Project type: IDR - Idejno rešenje / IDR - Conceptual design

Datum: Date: 25.01.2018 Projekcija: Projection:

Deo projekta: Project part: Projekat arhitekture / Arhitectural Design

Investitor: Client: JP ELEKTROPRIVREDA SRBIJE / PE ELEKTROPRIVREDA SERBIA

Objekat: Complex: Postrojenje za ODG za TE Nikola Tesla A / FGD Construction Project for TPP Nikola Tesla

Postrojenje: Facility: Zona krečnjaka i gipsa / Limestone and gypsum area

Deo postrojenja: Unit: C24-Zgrada mlevenja / C24-Limestone mill building

Razmera: Scale: 1/100

Naziv crteža: Drawing name: OSNOVA PRIZEMLJA ±0.00 / FLOOR PLAN ±0.00

Crtež broj: Drawing number: NTFGD-S1.0-IDR-1.0.0-C24-001D-rev00

List/od: Page/of: 1/6

Rev. 1

Ime fajla / File name: NTFGD-S1.0-IDR-1.0.0-C24-rev00.dwg

DI-07 - Rev. 3 - 19.06.15

OBJEKAT MLEVENJA KREČNJAKA / LIMESTONE MILL BUILDING

OSNOVA B (+11,0m) / FLOOR PLAN B (+11,0m)

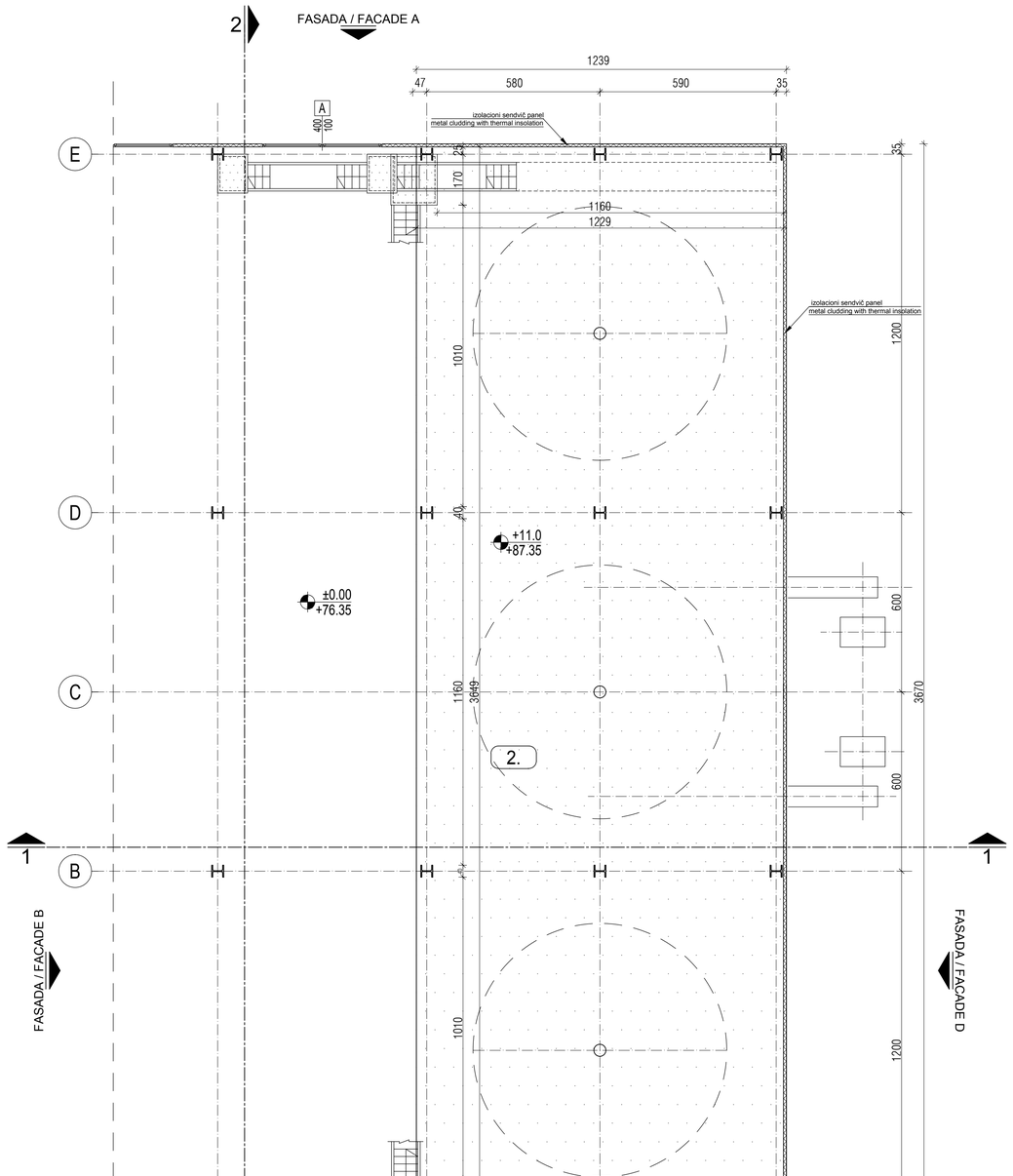

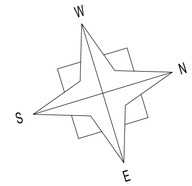

broj / No.	NAMENA PROSTORIJA / ROOMS	površina / area (m²)	obim / perimeter (m')
OSNOVA B (+11,0) / FLOOR PLAN B			
OBJEKAT MLEVENJA KREČNJAKA / LIMESTONE MILL BUILDING			
2	PROSTOR SILOSA KRECNJAKA / AREA OF LIMESTONE SILO	449,0	99,2
	UKUPNO / TOTAL:	449,0	
	NETO POVRŠINA OSNOVE B / NETO AREA B:	449,0	
	BRUTO POVRŠINA OSNOVE B / BRUTO AREA FLOOR B:	455,1	
	BRGP / GBA:	2040,6	
	POVRŠINA HORIZONTALNE PROJEKCIJE KROVA / AREA HORIZONTAL PROJECTION OF THE ROOF:	1331,9	

LEGENDA MATERIJALA:

ARMIRANI BETON	REINFORCED CONCRETE
NABIJENI BETON	LEAN CONCRETE
MRŠAVI BETON /TAMPON/	LEAN CONCRETE
GITER BLOK	CLAY BLOCK
PUNA OPEKA	BRICK BLOCK
FASADNI I KROVNI PANEL	FACADES AND ROOF PANEL
MOTAŽNI PREGRADNI ZID OD GK PLOČA	PREFABRICATED WALL PANELS
TERMOIZOLACIJA	THERMAL INSOLATION
HIDROIZOLACIJA	HYDROISOLATION
ŠLJUNAK	GRAVEL
ČELIČNA KONSTRUKCIJA	STEEL CONSTRUCTION
OLUCI	CHAMFER
DROBLJENI KAMEN	GRAVEL
NABIJENA ZEMLJA	HUDDLE GROUND

Мирјана Б. Лазић дипл.инж.арх. 300 4540 03 ИНЖЕЊЕРСКА КОМОРА СРБИЈЕ

REV.	Opis revizije / Revision description	Datum/Date	Crtao/Drawn	Overio/Appr.
1				
2				
3				

Broj ugovora / Contract No :12.01.12625/52-17

Konzorcium: Consortium:

delta inženjering
www.deltainzenjering.rs

	Ime i prezime / Name	Potpis/Sign.
Odg. projektant: Respon. designer:	Mirjana Lazić dipl.inž.arh.	
Licenca odg.proj.: Res. des. license:	300 4540 03	
Vrsta teh. dok.: Project type:	IDR - Idejno rešenje / IDR - Conceptual design	
Datum: Date:	25.01.2018.	Projekcija: Projection:
Deo projekta: Project part:	Projekat arhitekture / Arhitectural Design	

Investitor: Client: JP ELEKTROPRIVREDA SRBIJE / PE ELEKTROPRIVREDA SERBIA

Objekat: Complex: Postrojenje za ODG za TE Nikola Tesla A / FGD Construction Project for TPP Nikola Tesla

Postrojenje: Facility: Zona krečnjaka i gipsa / Limestone and gypsum area

Deo postrojenja: Unit: C24-Zgrada mlevenja / C24-Limestone mill building

Razmera: Scale: 1/100

Naziv crteža: Drawing name: OSNOVA NA KOTI +11.00 / FLOOR PLAN +11.00

Crtež broj: Drawing number: NTFGD-S1.0-IDR-1.0.0-C24-002D-rev00

List/od: Page/of: 2/6

Rev. 3

Ime fajla / File name: NTFGD-S1.0-IDR-1.0.0-C24-rev00.dwg

ZA D.01 - Rev. 3 - 15.05.15.

OBJEKAT MLEVENJA KREČNJAKA / LIMESTONE MILL BUILDING
OSNOVA C (+18,0m) / FLOOR PLAN C (+18,0)

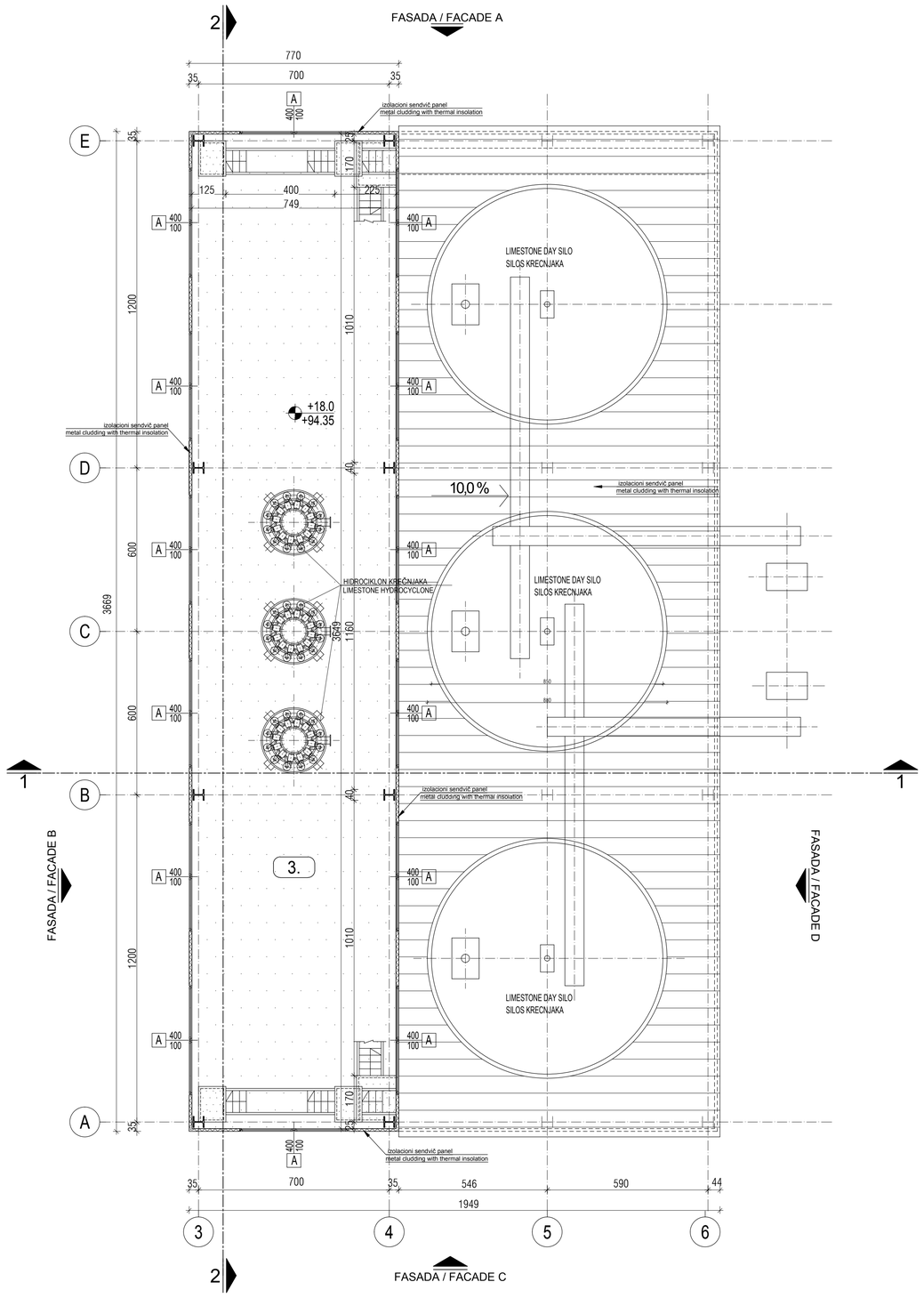

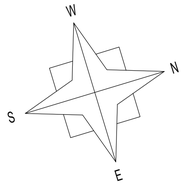

broj / No.	NAMENA PROSTORIJA / ROOMS	površina / area (m²)	obim / perimeter (m')
OSNOVA C (+18,0) / FLOOR PLAN C			
OBJEKAT MLEVENJA KREČNJAKA / LIMESTONE MILL BUILDING			
3	PROSTOR HIDROCIKLONA KRECNJAKA / AREA OF LIMESTONE HYDROCYCLONE	282,6	89,4
	UKUPNO / TOTAL:	282,6	
	NETO POVRŠINA OSNOVE C / NETO AREA C:	282,6	
	BRUTO POVRŠINA OSNOVE C / BRUTO AREA FLOOR C:	282,6	
	BRGP / GBA:	2040,6	
	POVRŠINA HORIZONTALNE PROJEKCIJE KROVA / AREA HORIZONTAL PROJECTION OF THE ROOF:	1331,9	
	UKUPNA NETO POVRŠINA OBJEKTA	2053,6	

LEGENDA MATERIJALA:

ARMIRANI BETON	REINFORCED CONCRETE
NABIJENI BETON	LEAN CONCRETE
MRŠAVI BETON /TAMPON/	LEAN CONCRETE
GITER BLOK	CLAY BLOCK
PUNA OPEKA	BRICK BLOCK
FASADNI I KROVNI PANEL	FACADES AND ROOF PANEL
MOTAŽNI PREGRADNI ZID OD GK PLOČA	PREFABRICATED WALL PANELS
TERMOIZOLACIJA	THERMAL INSOLATION
HIDROIZOLACIJA	HYDROISOLATION
ŠLJUNAK	GRAVEL
ČELIČNA KONSTRUKCIJA	STEEL CONSTRUCTION
OLUCI	CHAMFER
DROBLJENI KAMEN	GRAVEL
NABIJENA ZEMLJA	HUDDLE GROUND

REV.	Opis revizije / Revision description	Datum/Date	Crtao/Drawn	Overio/Appr.
1				
2				
3				

Broj ugovora / Contract No :12.01.12625/52-17

Konzorcium: Consortium: MITSUBISHI HITACHI POWER SYSTEMS; STOCHO; MITSUBISHI HITACHI POWER SYSTEMS EUROPE; Jedinstvo

delta inženjering
www.deltainzenjering.rs

	Ime i prezime / Name	Potpis/Sign.
Odg. projektant: Respon. designer:	Mirjana Lazić dipl.inž.arh.	
Licenca odg.proj.: Res. des. license:	300 4540 03	

Vrsta tehn. dok.: Project type: IDR - Idejno rešenje / IDR - Conceptual design
Datum: Date: 25.01.2018. Projekcija: Projection:
Deo projekta: Project part: Projekat arhitekture / Arhitectural Design

Investitor: Client: JP ELEKTROPRIVREDA SRBIJE / PE ELEKTROPRIVREDA SERBIA
Objekat: Complex: Postrojenje za ODG za TE Nikola Tesla A / FGD Construction Project for TPP Nikola Tesla
Postrojenje: Facility: Zona krečnjaka i gipsa / Limestone and gypsum area
Deo postrojenja: Unit: C24-Zgrada mlevenja / C24-Limestone mill building

Razmera: Scale: 1/100
Naziv crteža: Drawing name: OSNOVA NA KOTI +18.00 / FLOOR PLAN +18.00
Crtež broj: Drawing number: NTFGD-S1.0-IDR-1.0.0-C24-003D-rev00
List/sl.: Page/of.: 3/6
Rev.: 1

Inženjerska komora Srbije — Мирјана Б. Лазић дипломирани инжењер архитектуре — 300 4540 03

Ime fajla / File name: NTFGD-S1.0-IDR-1.0.0-C24-rev00.dwg

ZA 0-01 - Rev. 3 - 15.05.15.

OBJEKAT MLEVENJA KREČNJAKA / LIMESTONE MILL BUILDING

OSNOVA KROVNIH RAVNI / ROOF PLAN

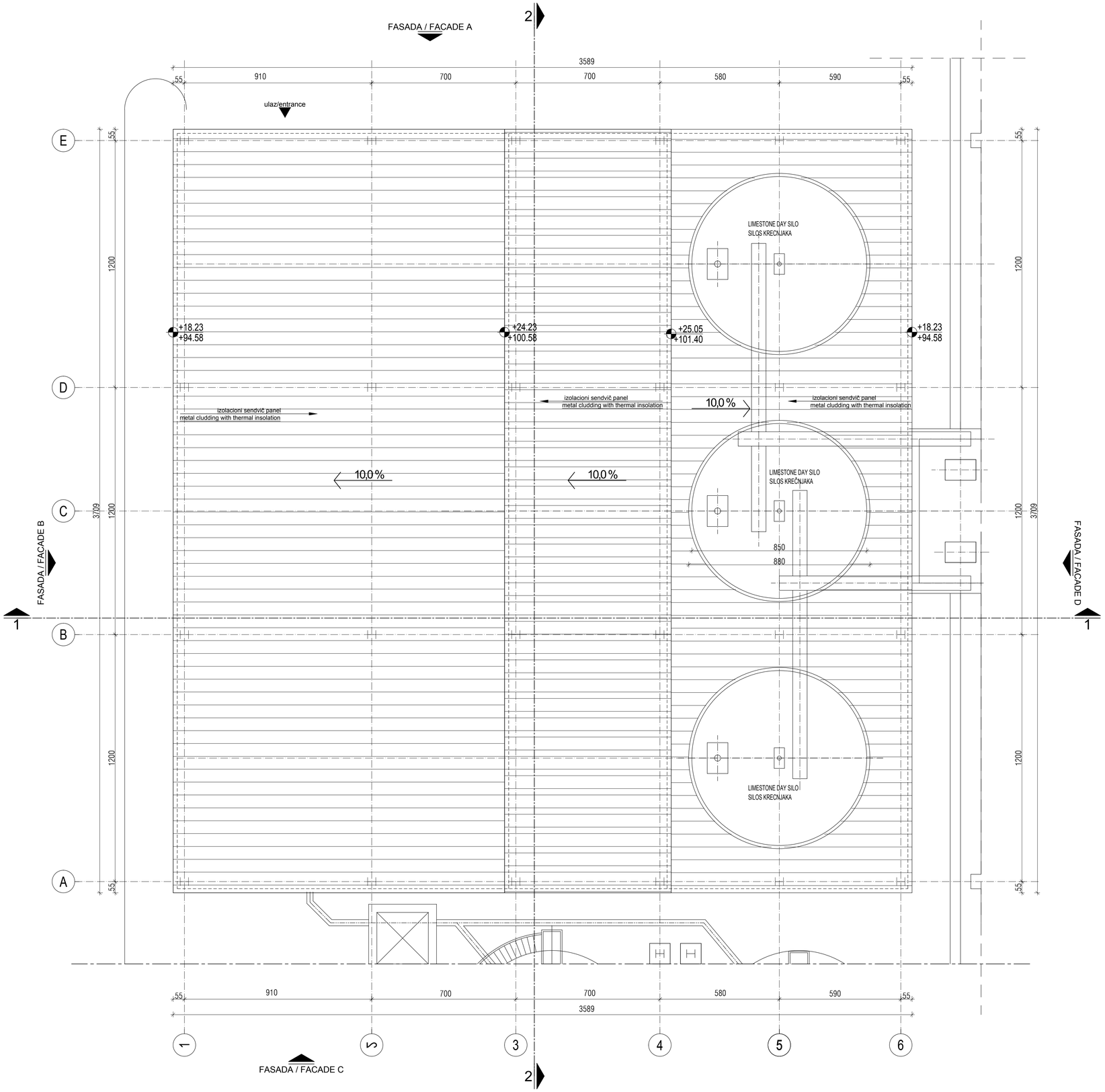

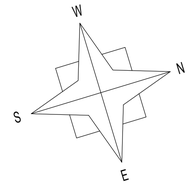

REV.	Opis revizije / Revision description	Datum/Date	Crtao/Drawn	Overio/Appr.
1				
2				
3				

Broj ugovora / Contract No :12.01.12625/52-17

Konzorcijum: Consortium:

delta inženjering

www.deltainzenjering.rs

	Ime i prezime / Name	Potpis/Sign.
Odg. projektant: Respon. designer:	Mirjana Lazić dipl.inž.arh.	
Licenca odg.proj.: Res. des. license:	300 4540 03	

Investitor: Client:	JP ELEKTROPRIVREDA SRBIJE PE ELEKTROPRIVREDA SERBIA
Objekat: Complex:	Postrojenje za ODG za TE Nikola Tesla A FGD Construction Project for TPP Nikola Tesla
Postrojenje: Facility:	Zona krečnjaka i gipsa Limestone and gypsum area
Deo postrojenja: Unit:	C24-Zgrada mlevenja C24-Limestone mill building

Vrsta teh. dok.: Project type:	IDR - Idejno rešenje IDR - Conceptual design
Datum: Date:	25.01.2018.
Projekcija: Projection:	
Deo projekta: Project part:	Projekat arhitekture Arhitectural Design

Razmera: Scale: 1/100	Naziv crteža: Drawing name: OSNOVA KROVNIH RAVNI ROOF PLAN	Crtež broj: Drawing number: NTFGD-S1.0-IDR-1.0.0-C24-004D-rev00	List/od: Page/of: 4/6 Rev. 3

Mirjana Lazić dipl.inž.arh. 300-4540-03

Ime fajla / File name: NTFGD-S1.0-IDR-1.0.0-C24-rev00.dwg

ZA-S01 - Rev. 3 - 16.09.16.

OBJEKAT MLEVENJA KREČNJAKA / LIMESTONE MILL BUILDING
PRESEK 1-1 / CROSS-SECTION 1-1

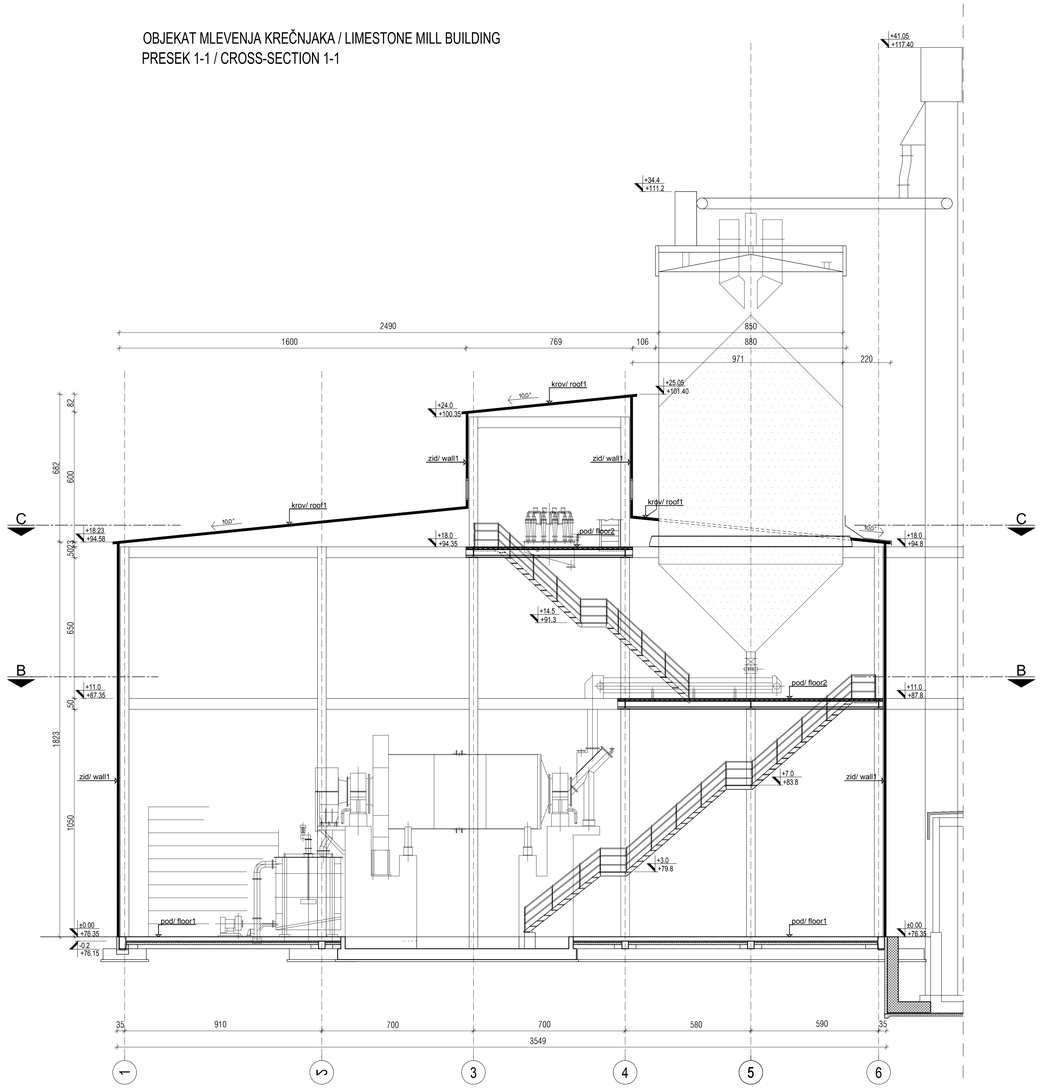

OBJEKAT MLEVENJA KREČNJAKA / LIMESTONE MILL BUILDING
PRESEK 2-2 / CROSS-SECTION 2-2

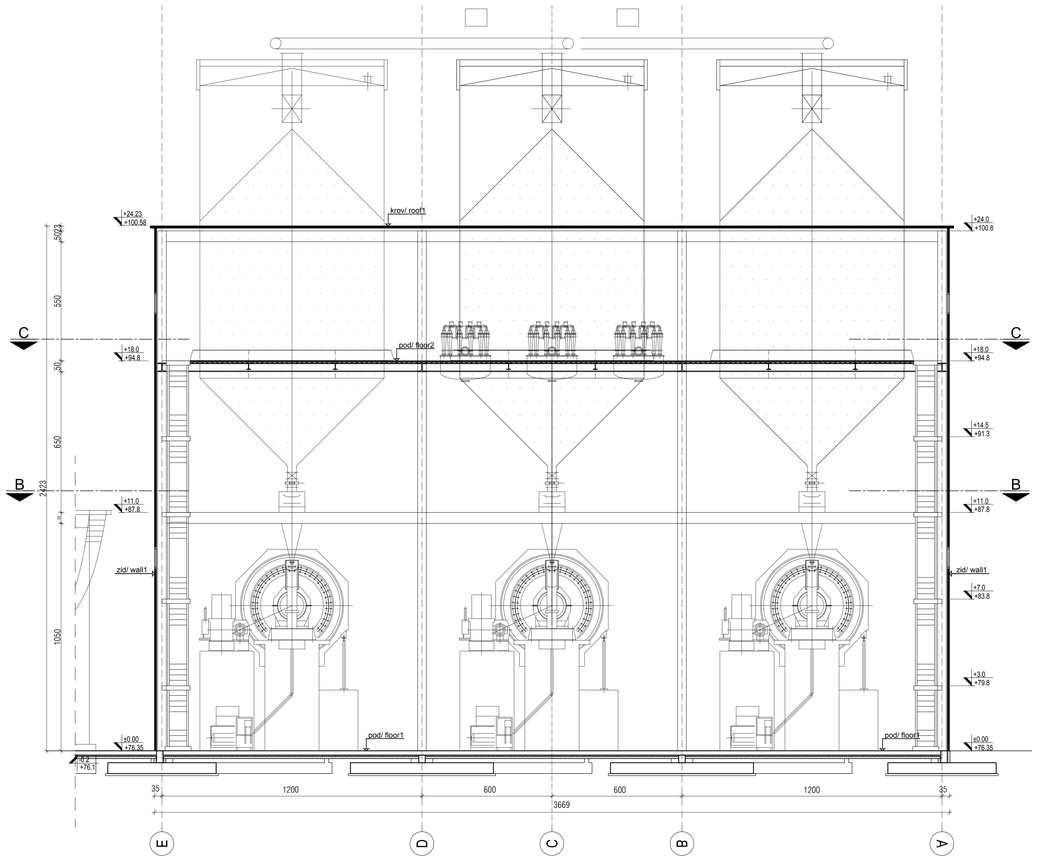

PODOVI, TAVANICE, ZIDOVI
floor, ceiling, walls

1. POD 1 / floor 1
   - PLOČA OD AB SITNOZRNOG BETONA, MB30,
     ZAVRŠNA OBRADA OD MONOLITA SA KVARCNIM POSIPOM / finegrained reinforced concrete, finishing of monoliths with quartz sanding
   - MRŠAV BETON MB10 / lean concrete
   - HIDROIZOLACIJA / hydroisolation
   - MRŠAV BETON MB10 / lean concrete
   - ŠLJUNAK NABIJENI / loaded gravel
2. POD 2 / floor 2
   - METALNA PODNA PLOČA SA BETONSKOM ISPUNOM / metal floor slab with concrete fill
   - ČELIČNA GREDA / steel beam
3. KROV 1 / roof 1
   - KROVNI PANEL PREKO ČELIČNE PODKONSTRUKCIJE / roof panel over steel substructure
4. ZID 1 / wall 1
   - FASADNI PANEL PREKO ČELIČNE PODKONSTRUKCIJE / facade panel over steel substructure

LEGENDA MATERIJALA:

ARMIRANI BETON	REINFORCED CONCRETE
NABIJENI BETON	LEAN CONCRETE
MRŠAVI BETON /TAMPON/	LEAN CONCRETE
GITER BLOK	CLAY BLOCK
PUNA OPEKA	BRICK BLOCK
FASADNI I KROVNI PANEL	FACADES AND ROOF PANEL
MOTAŽNI PREGRADNI ZID OD GK PLOČA	PREFABRICATED WALL PANELS
TERMOIZOLACIJA	THERMAL INSOLATION
HIDROIZOLACIJA	HYDROISOLATION
ŠLJUNAK	GRAVEL
ČELIČNA KONSTRUKCIJA	STEEL CONSTRUCTION
OLUCI	CHAMFER
DROBLJENI KAMEN	GRAVEL
NABIJENA ZEMLJA	HUDDLE GROUND

REV.	Opis revizije / Revision description	Datum/Date	Crtao/Drawn	Overio/Appr.
1				
2				
3				

Broj ugovora / Contract No :12.01.12625/52-17

Konzorcijum: Consortium: MT INTERNATIONAL TRADING & ENGINEERING; STOCHO; MT INTERNATIONAL TRADING & ENGINEERING; Jedinstvo

delta inženjering
www.deltainzenjering.rs

	Ime i prezime / Name	Potpis/Sign.
Odg. projektant: Respon. designer:	Mirjana Lazić dipl.inž.arh.	
Licenca odg.proj. License resp. design:	300 4540 03	
Vrsta tehn. dok.: Project type:	IDR - Glavni inženjerski IDR - Conceptual design	
Datum: Date:	25.01.2018.	
Projekcija: Projection:		
Dev projekta: Project part:	Projekat arhitektura / Architectural Design	

Investitor: Client: JP ELEKTROPRIVREDA SRBIJE / PE ELEKTROPRIVREDA SERBIA

Objekat: Complex: Postrojenje za ODG za TE Nikola Tesla A / FGD Construction Project for TPP Nikola Tesla

Postrojenje: Facility: Zona krečnjaka i gipsa / Limestone and gypsum area

Dev postrojenja: Unit: C24-Zgrada mlevenja / C24-Limestone mill building

Razmera: Scale: 1/100

Naziv crteža: Drawing name: PRESECI 1-1, 2-2 / CROSS SECTIONS 1-1, 2-2

Crtež broj: Drawing number: NTFGD-S1.0-IDR-1.0.0-C24-005D-rev00

List/sveg: Page/of: 5/6

Rev: 3

DRUŠTVO ZA PROJEKTOVANJE I INŽENJERING "Mirjana Lazić" d.o.o. Beograd, 300-4540-03

Plotted by: MIRJANA LAZIC on 2018-02-05 at 11:28:47 from NTFGD-S1.0-IDR-1.0.0-C24-005D-rev00.dwg

DK-02F, Rev. 2, 15.06.11

OBJEKAT MLEVENJA KREČNJAKA / LIMESTONE MILL BUILDING
FASADA A / FACADE A

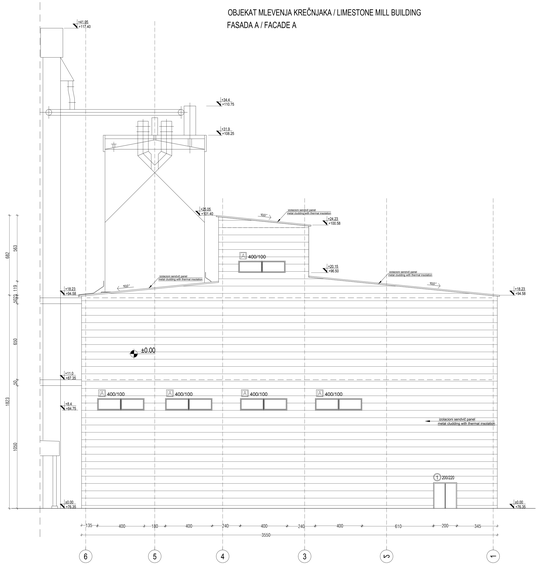

A			
A1			
A2			
A3			
REV.		Description	Date / Checked / Checked / Checked

Title:
Broj ugovora / Contract No: 12-01-D9/263-17

Investitor / Client: TOSCH

Generalni izvođač / General contractor: Strabag

Izvođač / Contractor: JP ELEKTROPRIVREDA SRBIJE / JP ELECTROPRIVREDA SERBIA

delta inženjering
www.deltainzenjering.rs

Glavni projektant / Main designer	DD-ENG-03	Faza projekta / Project phase	Projektanska na DDO na TE Nikola Tesla A
Glavni izvođač / Main contractor	JV Consortium Strabag - Tosch	Naziv projekta / Project name	Izgradnja mlevenja krečnjaka u Ćirikovcima
Glavni izvođač / Main contractor	JV Consortium Strabag - Tosch	Naziv objekta / Building name	Zona kamenja i pijeska Limestone and gypsum area
Datum / Date	30.04.2018	Razmera / Scale	1:200
Projektant / Designer	Arhitektonski biro Architectural Office	Broj crteža / Drawing number	01
Glavni projektant / Main designer	Dipl. inž. arh. Ivan Vasiljević S-100	Naziv crteža / Drawing name	FASADA A, B, C, D; FACADES A, B, C, D;
Broj licence / Licence number	5100	Oznaka crteža / Drawing number	0/TD/D-01-0-DR-1-S-C24-00BD-rev00

Format: A0

KOLSKA VAGA C 29.1 / PLAN OPLATE TEMELJA
TRUCK SCALE C 29.1 / FORMWORK FOUNDATION PLAN

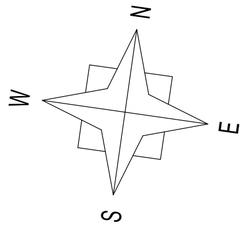

KOLSKA VAGA C 29.2 / PLAN OPLATE TEMELJA
TRUCK SCALE C 29.2 / FORMWORK FOUNDATION PLAN

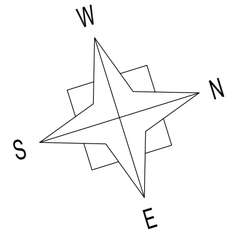

KOLSKA VAGA C 29.1, C 29.2 - PLAN OPLATE TEMELJA
TRUCK SCALE C 29.1, C 29.2 - FORMWORK FOUNDATION PLAN

OSNOVA JAME 29.1 / FLOOR PLAN 29.1

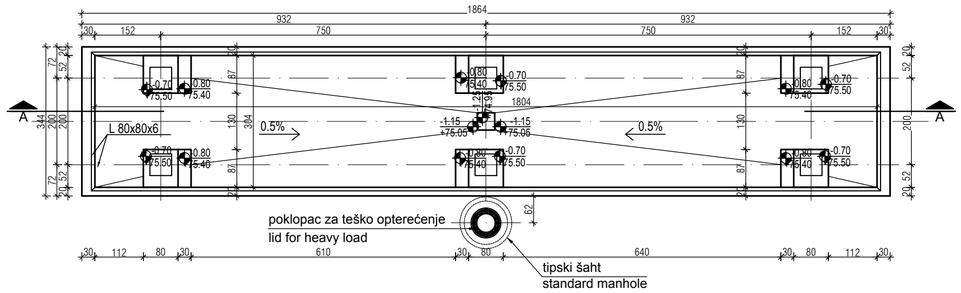

OSNOVA JAME 29.2 / FLOOR PLAN 29.2

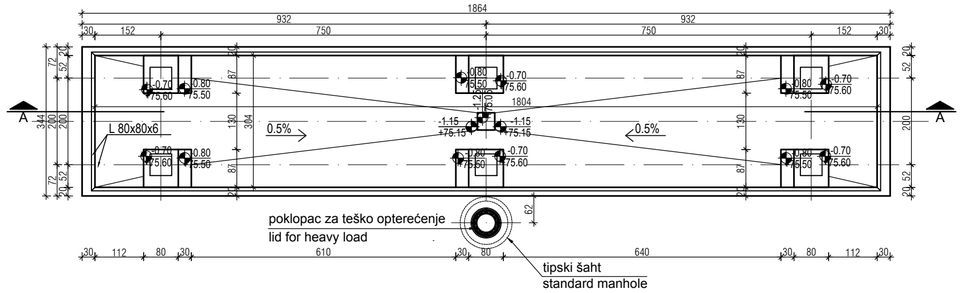

OSNOVA TAVANICE NA KOTI ±0.00 29.1 / ROOF PLAN ±0.00 29.1

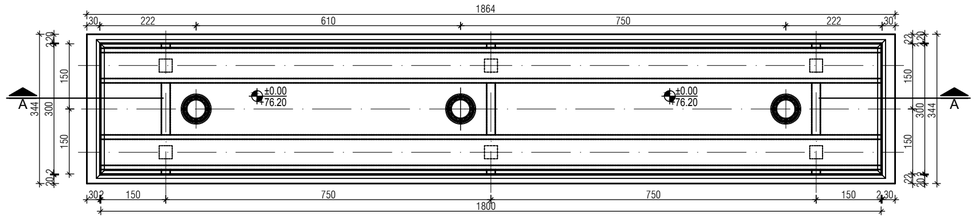

OSNOVA TAVANICE NA KOTI ±0.00 29.2 / ROOF PLAN ±0.00 29.2

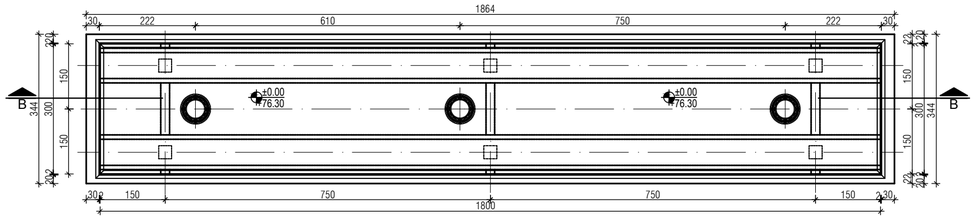

PODUŽNI PRESEK A-A 29.1 / CROSS SECTION A-A 29.1

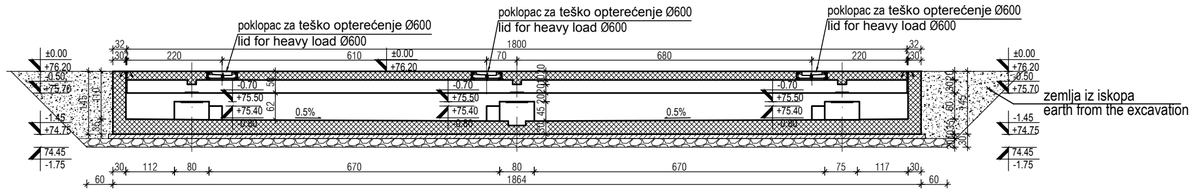

PODUŽNI PRESEK B-B 29.2 / CROSS SECTION B-B 29.2

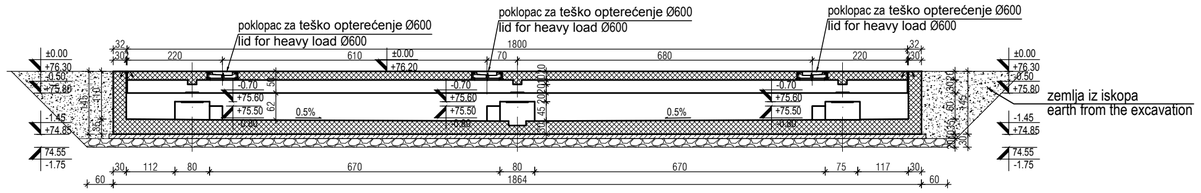

broj / No.	NAMENA PROSTORIJA / ROOMS	površina / area (m²)	obim / perimeter (m')
OSNOVA OBJEKTA /GROUND FLOOR -1.15			
KOLSKA VAGA C29.1 / TRUCK SCALE C29.1			
1	Kolska vaga osnova / Truck Scale floor	54.84	42.16
	UKUPNO / TOTAL:	54.84	42.16
	NETO POVRŠINA OSNOVE / NETO AREA GROUND FLOOR:	54.84	
	BRUTO POVRŠINA OSNOVE / BRUTO AREA GROUND FLOOR:	64.12	
	BRGP / GBA:	64.12	
	POVRŠINA HORIZONTALNE PROJEKCIJE KROVA / AREA HORIZONTAL PROJECTIONS OF THE ROOF:	64.12	

broj / No.	NAMENA PROSTORIJA / ROOMS	površina / area (m²)	obim / perimeter (m')
OSNOVA OBJEKTA /GROUND FLOOR -1.15			
KOLSKA VAGA C29.2 / TRUCK SCALE C29.2			
1	Kolska vaga osnova / Truck Scale floor	54.84	42.16
	UKUPNO / TOTAL:	54.84	42.16
	NETO POVRŠINA OSNOVE / NETO AREA GROUND FLOOR:	54.84	
	BRUTO POVRŠINA OSNOVE / BRUTO AREA GROUND FLOOR:	64.12	
	BRGP / GBA:	64.12	
	POVRŠINA HORIZONTALNE PROJEKCIJE KROVA / AREA HORIZONTAL PROJECTIONS OF THE ROOF:	64.12	

LEGENDA MATERIJALA:	LEGEND:
ARMIRANI BETON	REINFORCED CONCRETE
NABIJENI BETON	LEAN CONCRETE
MRŠAVI BETON /TAMPON/	LEAN CONCRETE
GITER BLOK	CLAY BLOCK
PUNA OPEKA	BRICK BLOCK
FASADNI I KROVNI PANEL	FACADES AND ROOF PANEL
MONTAŽNI PREGRADNI ZID OD GK PLOČA	PREFABRICATED WALL PANELS
TERMOIZOLACIJA	THERMAL INSOLATION
HIDROIZOLACIJA	HYDROISOLATION
ŠLJUNAK	GRAVEL
ČELIČNA KONSTRUKCIJA	STEEL CONSTRUCTION
OLUCI	CHAMFER
DROBLJENI KAMEN	GRAVEL
NABIJENA ZEMLJA	HUDDLE GROUND

INŽENJERSKA KOMORA SRBIJE
Мирјана Б. Лазић
дипл.инж.арх.
300 4540 03
ОВЛАШЋЕНИ ПРОJЕКТАНТ

REV.	Opis revizije / Revision description	Datum/Date	Crtao/Drawn	Overio/Appr.
1				
2				
01				

Broj ugovora / Contract No :12.01.12625/52-17

Konzorcium:
Consortium:

MITSUBISHI HITACHI POWER SYSTEMS | ITOCHU | MITSUBISHI HITACHI POWER SYSTEMS EUROPE | Jedinstvo

delta inženjering
www.deltainzenjering.rs

	Ime i prezime / Name	Potpis/Sign.
Odg. projektant: Respon. designer:	Mirjana Lazić dipl.inž.arh.	
Licenca odg.proj.: Res. des. license:	300 4540 03	

Vrsta teh. dok.: Project type: IDR - Idejno rešenje / IDR - Conceptual design
Datum: Date: 25.01.2018.
Projekcija: Projection:
Deo projekta: Project part: Projekat arhitekture / Arhitectural Design

Investitor: Client: JP ELEKTROPRIVREDA SRBIJE / PE ELEKTROPRIVREDA SERBIA
Objekat: Complex: Postrojenje za ODG za TE Nikola Tesla A / FGD Construction Project for TPP Nikola Tesla
Postrojenje: Facility: Zona krečnjaka i gipsa / Limestone and gypsum area
Deo postrojenja: Unit: C29.1, C29.2 - Kolske vage 1 i 2 / C29.1, C29.2 - Truck scale 1 and 2

Razmera: Scale: 1/100
Naziv crteža: Drawing name: PLAN OPLATE TEMELJA / FORMWORK FOUNDATION PLAN
Crtež broj: Drawing number: NTFGD-S1.0-IDR-1.0.0-C29.1_C29.2-001D-rev00
List/od: Page/of: 1/1
Rev. 00

Ime fajla / File name: NTFGD-S1.0-IDR-1.0.0-C29.1_C29.2-ele-00.dwg

ZA.Q.01 - Rev. 3 - 15.05.15.

GYPSUM STORAGE SILO / SILOS GIPSA
GROUND FLOOR PLAN +-0,00 / OSNOVA PRIZEMLJA +-0,00

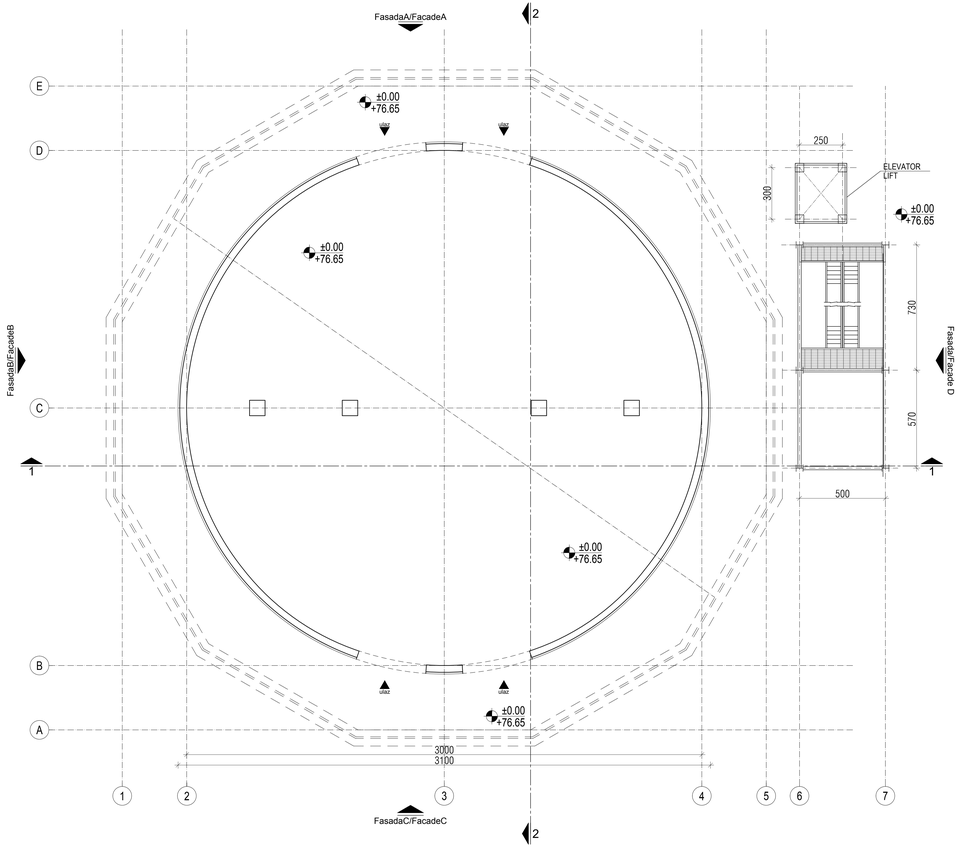

broj /No	NAMENA PROSTORIJA / ROOMS	površina / area (m²)	obim / perimetar (m')
OSNOVA PRIZEMLJA +-0,00m / GROUND FLOOR PLAN +-0,00m			
SILOS GIPSA / GYPSUM STORAGE SILO			
2	SKLADIŠTE GIPSA 1 / GYPSUM STORAGE SILO 1	706,5	94,2
	UKUPNO / TOTAL:	706,5	
	NETO POVRŠINA PRIZEMLJA / NETO AREA GROUND FLOOR:	706,5	
	BRUTO POVRŠINA PRIZEMLJA / BRUTO AREA of GROUND FLOOR:	754,4	
	BRGP / GBA:	3997,4	
	POVRŠINA HORIZONTALNE PROJEKCIJE KROVA / AREA HORIZONTAL PROJECTION OF THE ROOF:	1320,4	

GYPSUM STORAGE SILO / SILOS GIPSA
FLOOR PLAN +12,80 / OSNOVA NA +12,80

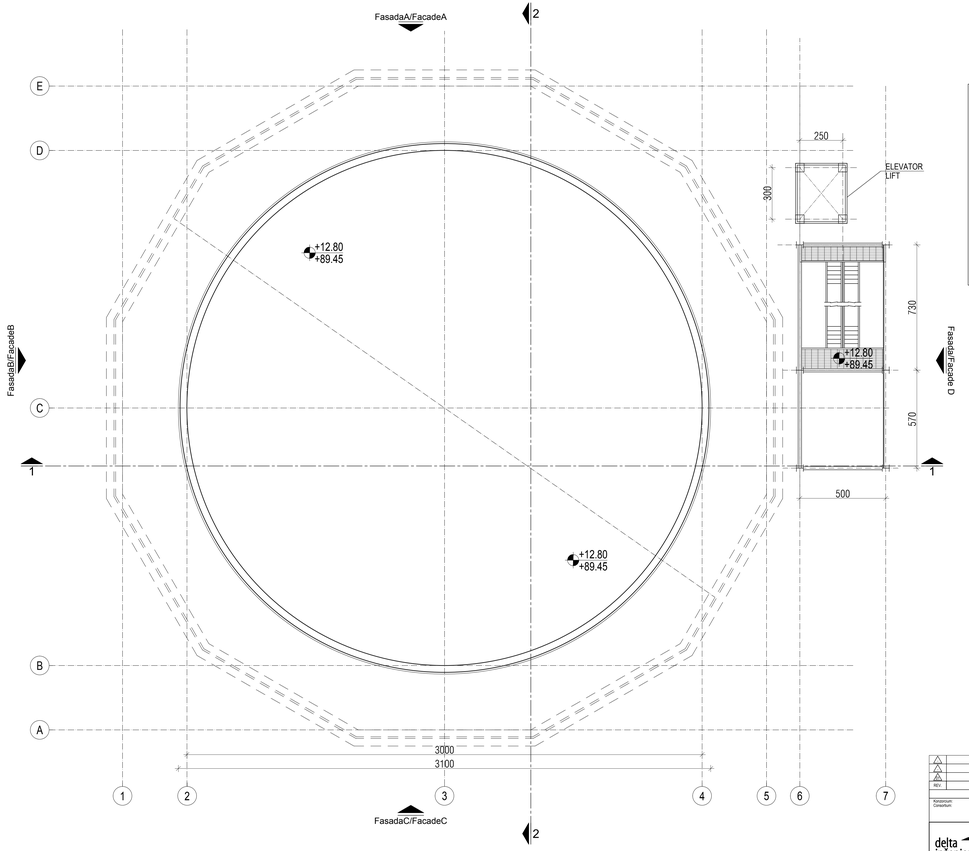

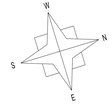

LEGENDA MATERIJALA / LEGEND:

ARMIRANI BETON	REINFORCED CONCRETE
NABIJENI BETON	LEAN CONCRETE
MRŠAVI BETON /TAMPON/	LEAN CONCRETE
GITER BLOK	CLAY BLOCK
PUNA OPEKA	BRICK BLOCK
FASADNI I KROVNI PANEL	FACADES AND ROOF PANEL
MOTAŽNI PREGRADNI ZID OD GK PLOČA	PREFABRICATED WALL PANELS
TERMOIZOLACIJA	THERMAL INSOLATION
HIDROIZOLACIJA	HYDROISOLATION
ŠLJUNAK	GRAVEL
ČELIČNA KONSTRUKCIJA	STEEL CONSTRUCTION
OLUCI	CHAMFER
DROBLJENI KAMEN	GRAVEL
NABIJENA ZEMLJA	HUDDLE GROUND

broj /No	NAMENA PROSTORIJA / ROOMS	površina / area (m²)	obim / perimetar (m')
OSNOVA NA +12,80m / FLOOR PLAN +12,80m			
SILOS GIPSA / GYPSUM STORAGE SILO			
2	SKLADIŠTE GIPSA 2 / GYPSUM STORAGE SILO 2	706,5	94,2
	UKUPNO / TOTAL:	706,5	
	NETO POVRŠINA +12,8 / NETO AREA of FLOOR PLAN +12,8:	706,5	
	BRUTO POVRŠINA +12,8 / BRUTO AREA of FLOOR PLAN +12,8:	754,4	
	BRGP / GBA:	3997,4	
	POVRŠINA HORIZONTALNE PROJEKCIJE KROVA / AREA HORIZONTAL PROJECTION OF THE ROOF:	1320,4	

REV	Opis revizije / Revision description	Datum/Date	Crtao/Drawn	Overa/Sign
1				
2				
3	Promena parcela / Changed title block	25.01.2018.	M. Zakić d.i.a.	

Broj ugovora / Contract No :12.01.12625/52-17

Konsorcijum/ Consortium: MT Engineering d.o.o. Beograd; STOCWO; MT Engineering d.o.o. Beograd; Jedinstvo

JP ELEKTROPRIVREDA SRBIJE
PE ELEKTROPRIVREDA SERBIA

delta inženjering
www.deltainzenjering.rs

Glavni projektant / Main designer	Mirjana Lazić dipl.inž.arh.	Predsednik Uprave / President	
Nadzor izvršilaca / Supervisor		Direktor Sektora / Director	
Ime, ime kompanije / Name, name of company	SOD IGMO DS	Glavni izvođač / Contractor	Postrojenja za ODG za TE Nikola Tesla A / FGD Construction Project for TPP Nikola Tesla
Vrsta tehn. dok. / Type of tech. doc.	IDR - Glavni nacrt / CDR - Conceptual design	Radionica / Workshop	Zona kreč/gipsa / gipsa Limestone and gypsum area
Datum / Date	25.01.2018.	Faza projekta / Project phase	
Naziv projekta / Project project	Projekat arhitekture / Architectural Design	Oznaka projekta / Sign	C30-Silos gipsa / C30-Gypsum storage silo
Razmera / Scale	OSNOVA PRIZEMLJA ±0.00 I OSNOVA NA KOTI I +12.80 / GROUND FLOOR PLAN AND FLOOR PLAN +12.80	Oznaka crteža / Code drawing number	NTFGD-S1.0-IDR-1.0.0-C30-0010-rev00
1/100			

Mapljana S. Jarah
Ministarstvo za ljudska i manjinska prava i dijalog

Format: A0 | Broj listova / Number of sheets: 1/5 | Broj: | Revizija / Revision: 1

OVAJ DOKUMENAT JE VLASNIŠTVO PREDUZEĆA MT ENGINEERING DOO BEOGRAD. SVAKA ZLOUPOTREBA PODLIŽE KAZNENOM I GRAĐANSKOM PRAVU. THIS DOCUMENT IS PROPERTY OF MT ENGINEERING DOO BEOGRAD. ANY MISUSE IS SUBJECT TO CRIMINAL AND CIVIL LAW.

GYPSUM STORAGE SILO / SILOS GIPSA
FLOOR PLAN +33,50 / OSNOVA NA +33,50

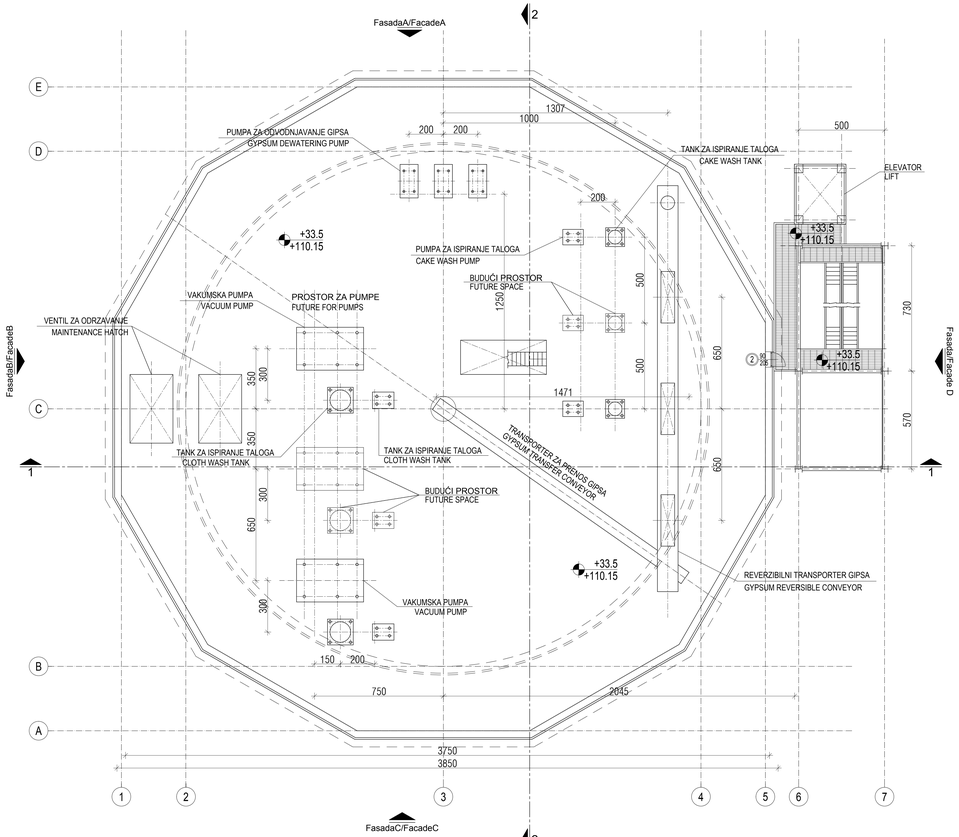

broj /No	NAMENA PROSTORIJA / ROOMS	površina / area (m²)	obim / perimeter (m')
OSNOVA NA +33,50m / FLOOR PLAN +33,50m			
SILOS GIPSA / GYPSUM STORAGE SILO			
2	UTOVARNA STANICA ZA GIPS 1 / GYPSUM LOADING STATION 1	1130,8	124,6
	UKUPNO / TOTAL:	1130,8	
NETO POVRŠINA +33,5 / NETO AREA of FLOOR PLAN +33,5:		1130,8	
BRUTO POVRŠINA +33,5 / BRUTO AREA of FLOOR PLAN +33,5:		1244,3	
BRGP / GBA:		3997,4	
POVRŠINA HORIZONTALNE PROJEKCIJE KROVA / AREA HORIZONTAL PROJECTION OF THE ROOF:		1320,4	

GYPSUM STORAGE SILO / SILOS GIPSA
FLOOR PLAN +40,00 / OSNOVA NA +40,00

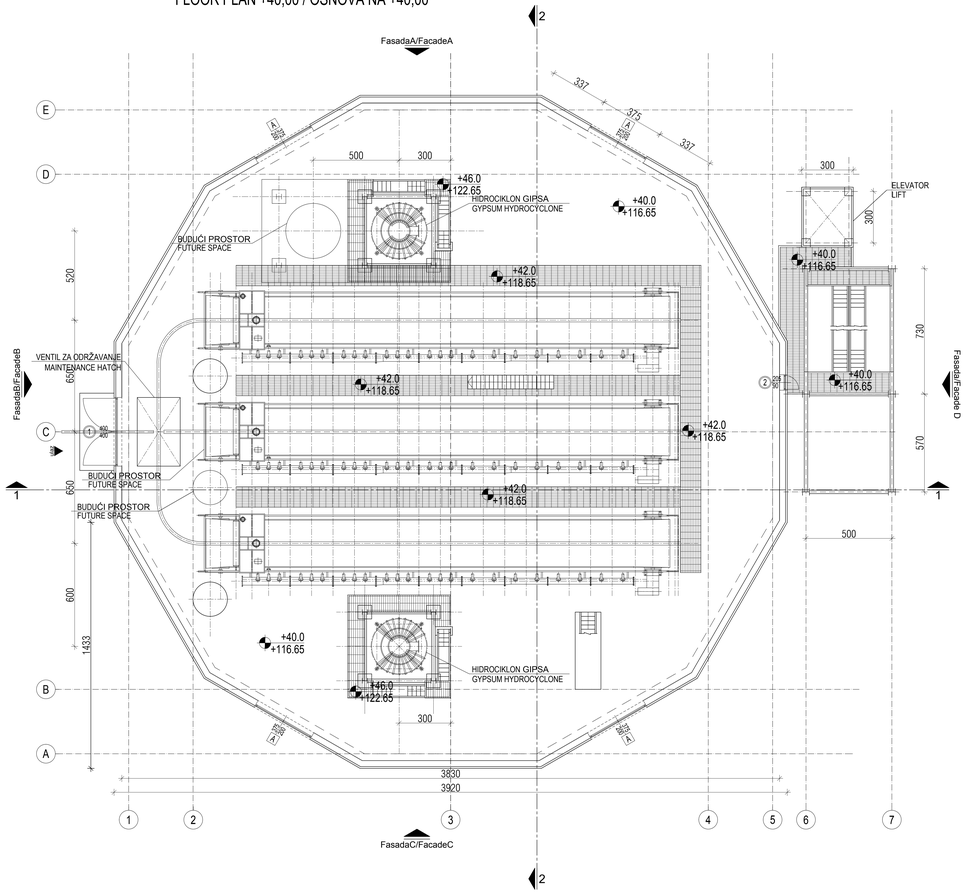

LEGENDA MATERIJALA / LEGEND:

ARMIRANI BETON	REINFORCED CONCRETE
NABIJENI BETON	LEAN CONCRETE
MRŠAVI BETON /TAMPON/	LEAN CONCRETE
GITER BLOK	CLAY BLOCK
PUNA OPEKA	BRICK BLOCK
FASADNI I KROVNI PANEL	FACADES AND ROOF PANEL
MONTAŽNI PREGRAĐNI ZID OD GK PLOČA	PREFABRICATED WALL PANELS
TERMOIZOLACIJA	THERMAL INSOLATION
HIDROIZOLACIJA	HYDROISOLATION
ŠLJUNAK	GRAVEL
ČELIČNA KONSTRUKCIJA	STEEL CONSTRUCTION
OLUCI	CHAMFER
DROBLJENI KAMEN	GRAVEL
NABIJENA ZEMLJA	HUDDLE GROUND

broj /No	NAMENA PROSTORIJA / ROOMS	površina / area (m²)	obim / perimeter (m')
OSNOVA NA +40,00m / FLOOR PLAN +40,00m			
SILOS GIPSA / GYPSUM STORAGE SILO			
2	UTOVARNA STANICA ZA GIPS 1 / GYPSUM LOADING STATION 1	1130,8	124,6
	UKUPNO / TOTAL:	1130,8	
NETO POVRŠINA +40,0 / NETO AREA of FLOOR PLAN +40,0:		1130,8	
BRUTO POVRŠINA +40,0 / BRUTO AREA of FLOOR PLAN +40,0:		1244,3	
BRGP / GBA:		3997,4	
POVRŠINA HORIZONTALNE PROJEKCIJE KROVA / AREA HORIZONTAL PROJECTION OF THE ROOF:		1320,4	

REV.	Opis revizije / Revision description	Datum/Date	Crtao/Drawn	Overa/Appr.
1	Promena pečata / Changed title block	25.01.2018.	M. Zakić d.o.o.	
2				
3				

Broj ugovora / Contract No : 12.01.12625/52-17

Konsorcijum/Consortium: MT-I, STOCWO, MT-I, Jaroslav Černi Institut za vodoprivredu

delta inženjering
www.deltainzenjering.rs

Ime projektanta / Name designer	Mirjana Lazić dipl.inž.arh.	Potpis / Sign	
Broj ovlašćenja / Licence number	300 4340 03	Glavni projektant / Chief designer	Postrojenja za ODG za TE Nikola Tesla A / FGD Construction Project for TPP Nikola Tesla
Ime glav. inženjera / Name chief designer	Čirić Čedomir		
Faza glav. projekta / Project phase	IDR - Idejno rešenje / Conceptual design	Nazivlokacije / Location	Zona krečnjaka i gipsa / Limestone and gypsum area
Datum / Date	25.01.2018.	Broj projekta / Project no.	C30-Silos gipsa / C30-Gypsum storage silo
Naziv projekta / Project part	Projekat arhitekture / Architectural Design	Broj priloga / Attachment no.	

JP ELEKTROPRIVREĐA SRBIJE
PE ELEKTROPRIVREDA SERBIA

Mapjana S. Lazić
Arhitekta
Beograd

Razmera / Scale	Naziv crteža / Drawing title	Broj crteža / Drawing number	Izdanje / Edition
1/100	OSNOVA NA KOTI +33.50 I OSNOVA NA KOTI +40.00 FLOOR PLAN +33.50 AND FLOOR PLAN +40.00	NTFGD-S1.0-IDR-1.0.0-C30-002D-rev01	Broj / No. 25

Format: A0

OSNOVA NA KOTI +33.50 I OSNOVA NA KOTI +40.00 FLOOR PLAN +33.50 AND FLOOR PLAN +40.00
NTFGD-S1.0-IDR-1.0.0-C30-002D-rev01
25.01.2018
KONCEPCIJA, PLANOVI I NACRTI NEMAJU VAŽEĆU PRAVNU VREDNOST DO IZDAVANJA VAŽEĆIH PRAVNO VALJANIH DOKUMENATA. SVA PRAVA ZADRŽANA. NI JEDAN DEO OVE DOKUMENTACIJE NE MOŽE BITI KOPIRAN NITI DATI NA UPOTREBU TREĆIM LICIMA BEZ PISMENOG PRISTANKA IZVOĐAČA.
CONCEPTUAL DESIGN, PLANS AND DRAWINGS HAVE NO VALIDITY UNTIL FINAL DOCUMENTS ARE ISSUED. ALL RIGHTS RESERVED. NO PART OF THIS DOCUMENT MAY BE COPIED OR MADE AVAILABLE TO THIRD PARTIES WITHOUT WRITTEN PERMISSION OF THE ENGINEER.

GYPSUM STORAGE SILO / SILOS GIPSA
ROOF PLAN / OSNOVA KROVA

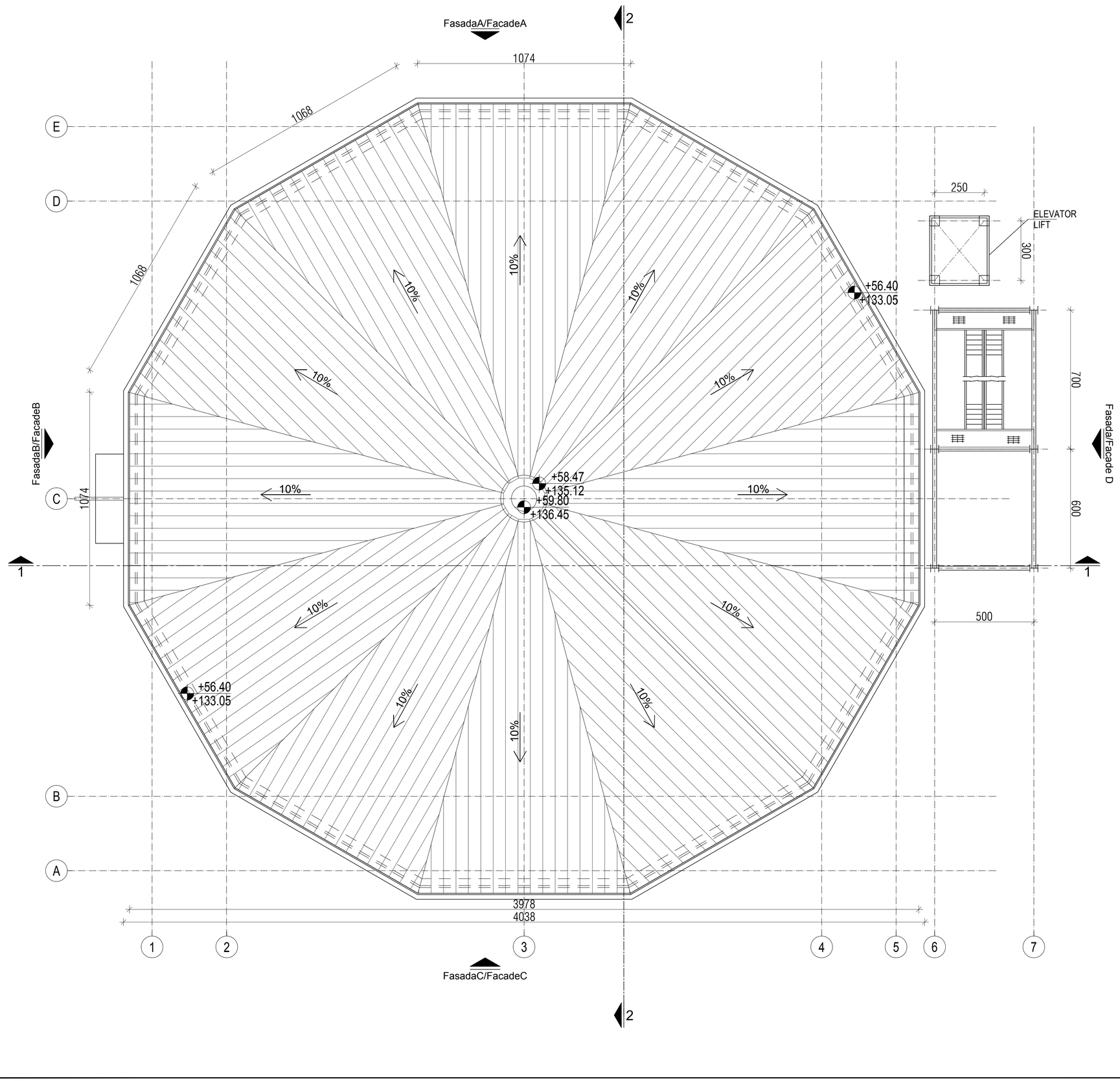

CONFIDENTIAL
THIS DOCUMENT IS THE PROPERTY OF MITSUBISHI HITACHI POWER SYSTEMS, LTD. (MHPS) AND CONFIDENTIAL. IT MUST NEITHER BE COPIED NOR USED FOR ANY PURPOSE OR MANNER OTHER THAN EXPRESSLY PERMITTED BY MHPS OR WITH A PRIOR WRITTEN CONSENT OF MHPS. SUBJECT TO THE FOREGOING, IT IS HEREBY COVERED BY MHPS COPYRIGHT. ANY WRONGFUL WAY, BREACH OR INFRINGEMENT OF ANY KIND WILL LEAD TO LEGAL ACTION.

REV.	Opis revizije / Revision description	Datum/Date	Crtao/Drawn	Overio/Appr.
1				
2				
3	Promena pečata / Changed title block	25.01.2018.	M. Zakula d.i.a.	

Broj ugovora / Contract No :12.01.12625/52-17

Konzorcijum: Consortium:

delta inženjering
www.deltainzenjering.rs

	Ime i prezime / Name	Potpis/Sign.
Odg. projektant: Respon. designer:	Mirjana Lazić dipl.inž.arh.	
Licenca odg.proj. Res. des. license:	300 4540 03	
Vrsta teh. dok.: Project type:	IDR - Idejno rešenje / IDR - Conceptual design	
Datum: Date:	25.01.2018.	Projekcija: Projection:
Deo projekta: Project part:	Projekat arhitekture / Architectural Design	

Investitor: Client: JP ELEKTROPRIVREDA SRBIJE / PE ELEKTROPRIVREDA SERBIA

Objekat: Complex: Postrojenje za ODG za TE Nikola Tesla A / FGD Construction Project for TPP Nikola Tesla

Postrojenje: Facility: Zona krečnjaka i gipsa / Limestone and gypsum area

Deo postrojenja: Unit: C30-Silos gipsa / C30-Gypsum storage silo

Razmera: Scale: 1/100

Naziv crteža: Drawing number: OSNOVA KROVNIH RAVNI / ROOF PLAN

Crtež broj: Drawing number: NTFGD-S1.0-IDR-1.0.0-C30-003D-rev00

List/od: Page/of: 3/5

Rev. 1

Ime fajla / File name: NTFGD-S1.0-IDR-1.0.0-C30-rev00.dwg

DI-07 - Rev. 2 - 19.06.15

GYPSUM STORAGE SILO / SILOS GIPSA
CROSS SECTION 1-1 / PRESEK 1-1

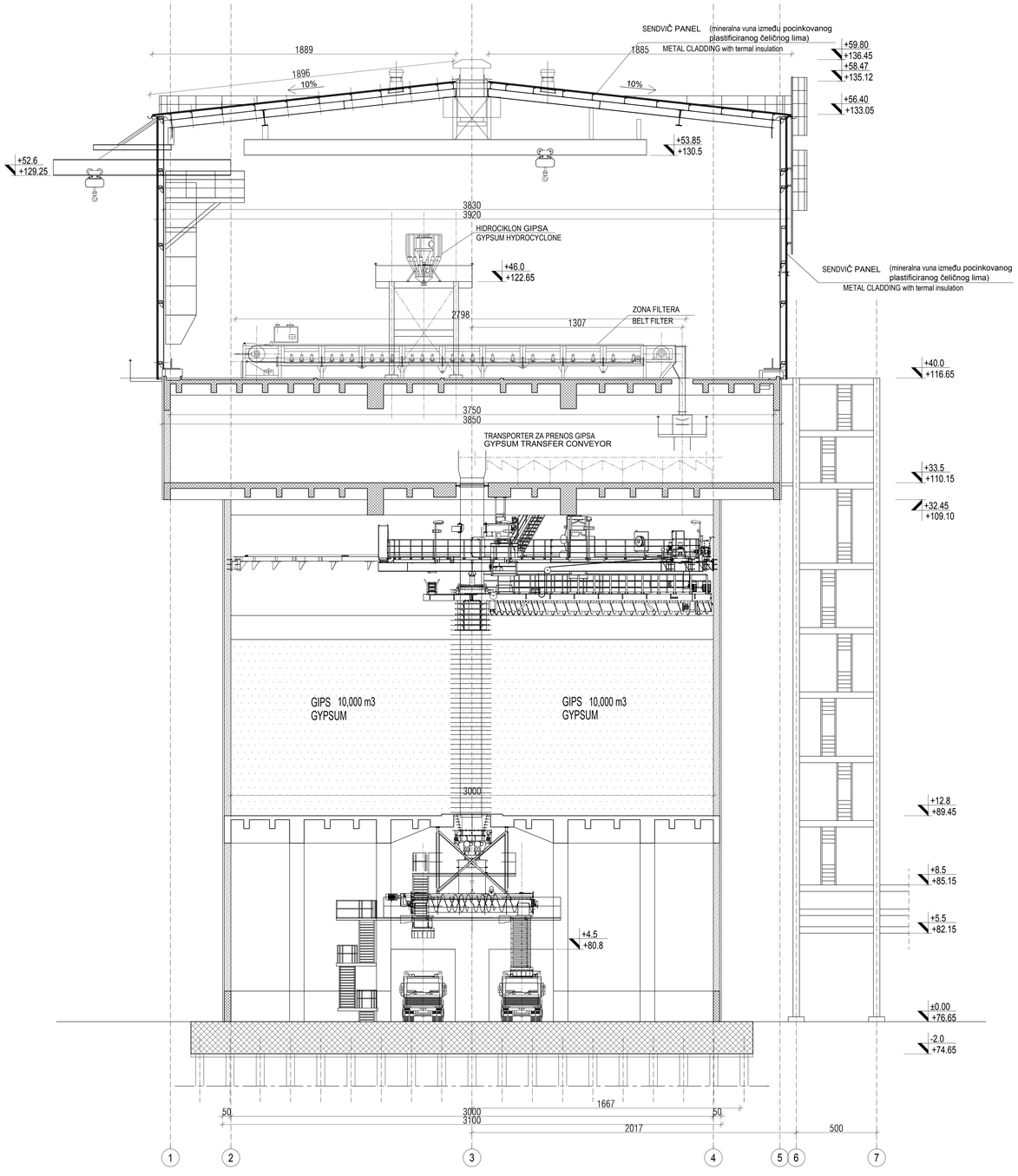

GYPSUM STORAGE SILO / SILOS GIPSA
CROSS SECTION 2-2 / PRESEK 2-2

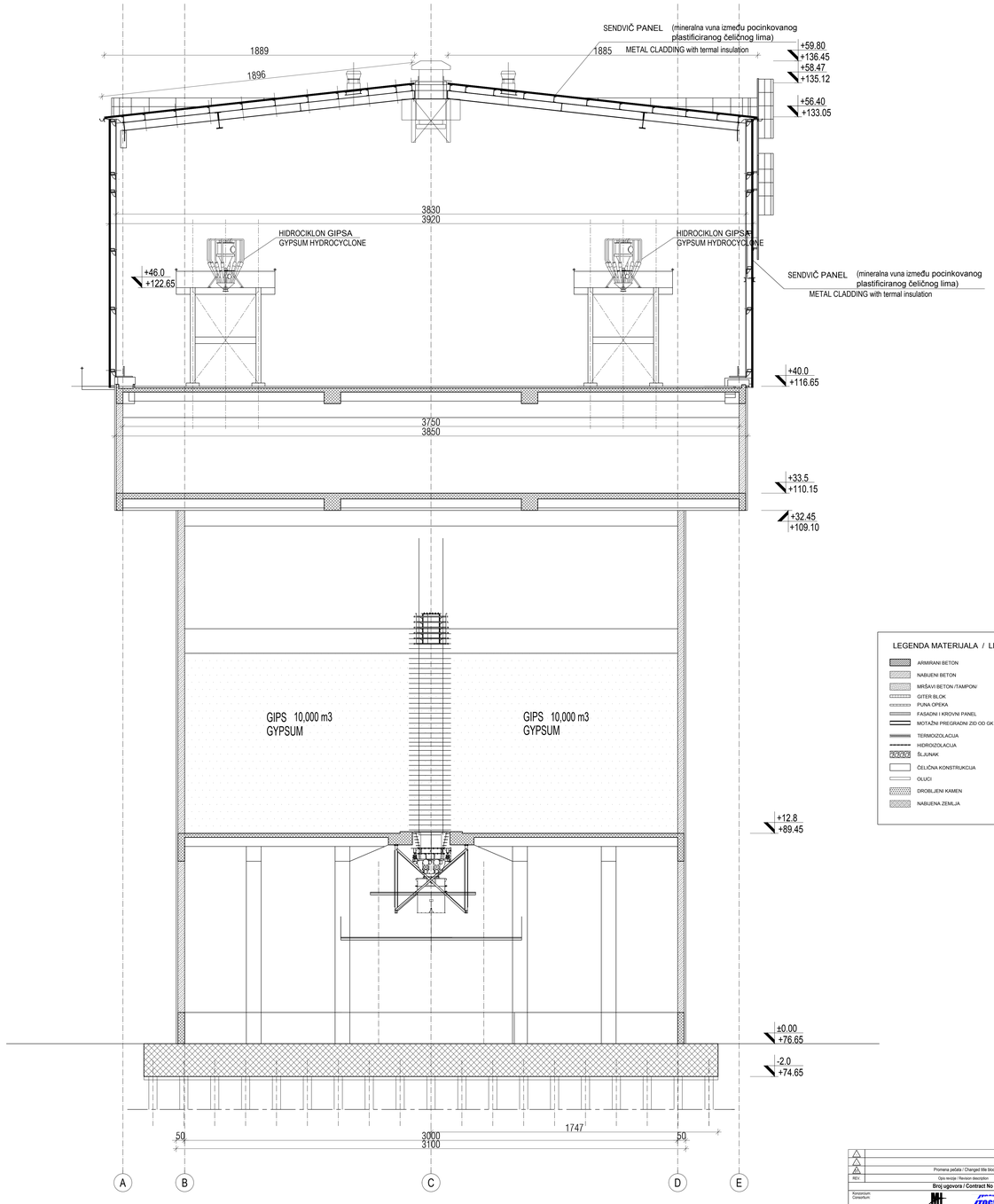

LEGENDA MATERIJALA / LEGEND:

ARMIRANI BETON	REINFORCED CONCRETE
NABIJENI BETON	LEAN CONCRETE
MRŠAVI BETON /TAMPON/	LEAN CONCRETE
GITER BLOK	CLAY BLOCK
PUNA OPEKA	BRICK BLOCK
FASADNI I KROVNI PANEL	FACADES AND ROOF PANEL
MONTAŽNI PREGRADNI ZID OD GK PLOČA	PREFABRICATED WALL PANELS
TERMOIZOLACIJA	THERMAL INSOLATION
HIDROIZOLACIJA	HYDROISOLATION
ŠLJUNAK	GRAVEL
ČELIČNA KONSTRUKCIJA	STEEL CONSTRUCTION
OLUCI	CHAMFER
DROBIJENI KAMEN	GRAVEL
NABIJENA ZEMLJA	HUDDLE GROUND

REV.	Opis revizije / Revision description	Datum/Date	Crtao/Drawn	Overio/Appr.
1				
2				
3	Promena paćuta / Changed title block	25.01.2018.	N. Zarubi d.o.o.	

Broj ugovora / Contract No : 12.01.12625/52-17

Konzorcijum: Consortium: MHI POWER EUROPE, STOCWO, MHI POWER EUROPE, Jochtenbro

delta inženjering
www.deltainzenjering.rs

Glavni projektant: Chief designer:	Ime i prezime / Name: Mirjana Lazić dipl.inž.arh.	Potpis/Sign.	Investitor: Client: JP ELEKTROPRIVREDA SRBIJE / PE ELEKTROPRIVREDA SERBIA
Broj licence: License reg.no.:	300 4540 03		Objekat: Complex: Proširenje za GOG za TE Nikola Tesla A / FGD Construction Project for TPP Nikola Tesla
Broj sert. ako: Project type:	IDR - Idejno rešenje / IDR - Conceptual design		
Datum: Date:	26.01.2018.	Saglasnost: Projection:	Podcelina: Facility: Zona krečnjaka i gipsa / Limestone and gypsum area
Naziv projekta: Project part:	Projekat arhitekture / Architectural Design		Deo postrojenja: Unit: C30-Silos gipsa / C30-Gypsum storage silo
Razmera: Scale: 1/100	Naziv crteža: Drawing name: PRESECI 1-1, 2-2 / CROSS SECTIONS 1-1, 2-2		Crtež broj: Drawing number: NTFGD-S1.0-IDR-1.0.0-C30-004D-rev00

Listova: Pages: 4/5
Rev.: 3

CONFIDENTIAL
THIS DOCUMENT IS THE PROPERTY OF MITSUBISHI HITACHI POWER SYSTEMS, LTD. (MHPS) AND CONTAINS INFORMATION THAT IS PROPRIETARY AND CONFIDENTIAL. IT MUST NOT BE COPIED OR USED FOR ANY PURPOSE OR MADE AVAILABLE TO ANY PERSON OR ENTITY WITHOUT THE WRITTEN PERMISSION OF MHPS. NEITHER IT NOR THE INFORMATION CONTAINED IN IT MAY BE DISCLOSED TO THIRD PARTIES IN ANY FORM WITHOUT THE WRITTEN PERMISSION OF MHPS.

GYPSUM STORAGE SILO / SILOS GIPSA
FACADE D / FASADA D

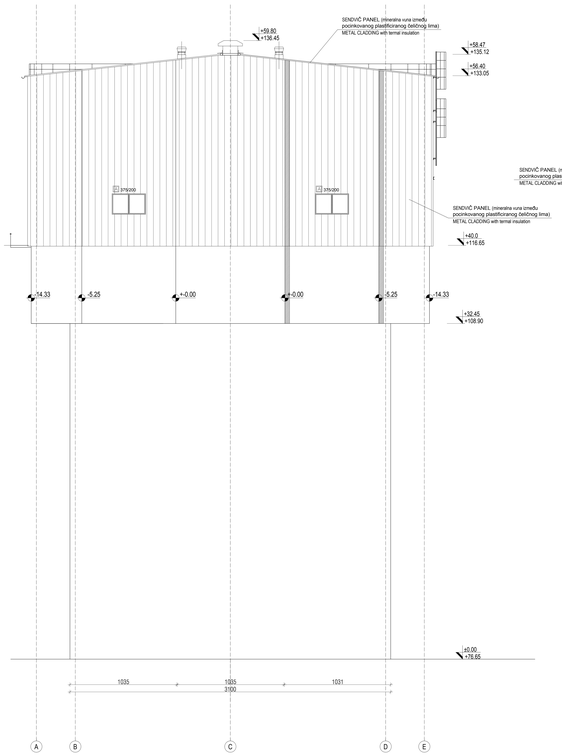

GYPSUM STORAGE SILO / SILOS GIPSA
FACADE B / FASADA B

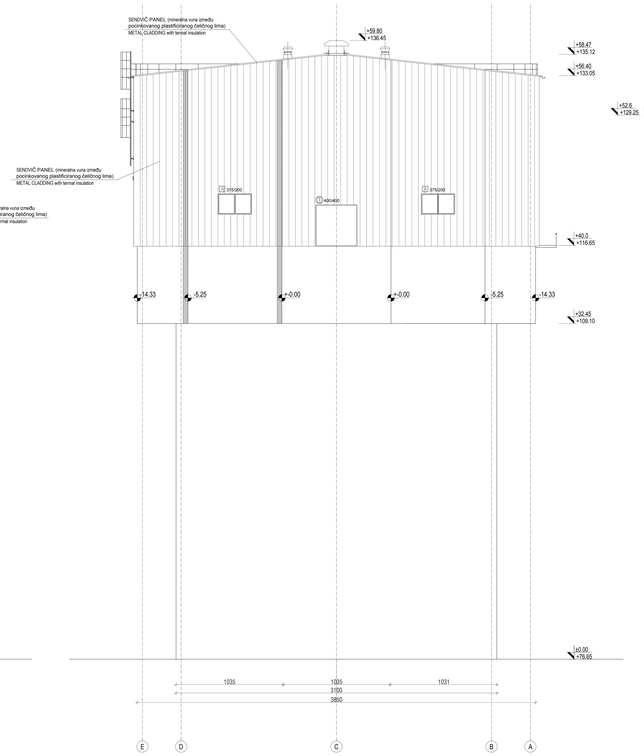

GYPSUM STORAGE SILO / SILOS GIPSA
FACADE C / FASADA C

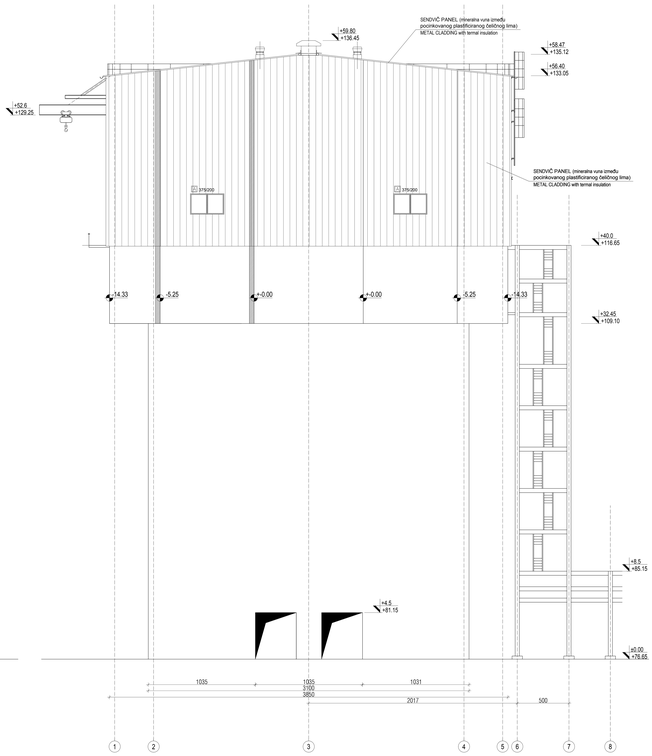

GYPSUM STORAGE SILO / SILOS GIPSA
FACADE A / FASADA A

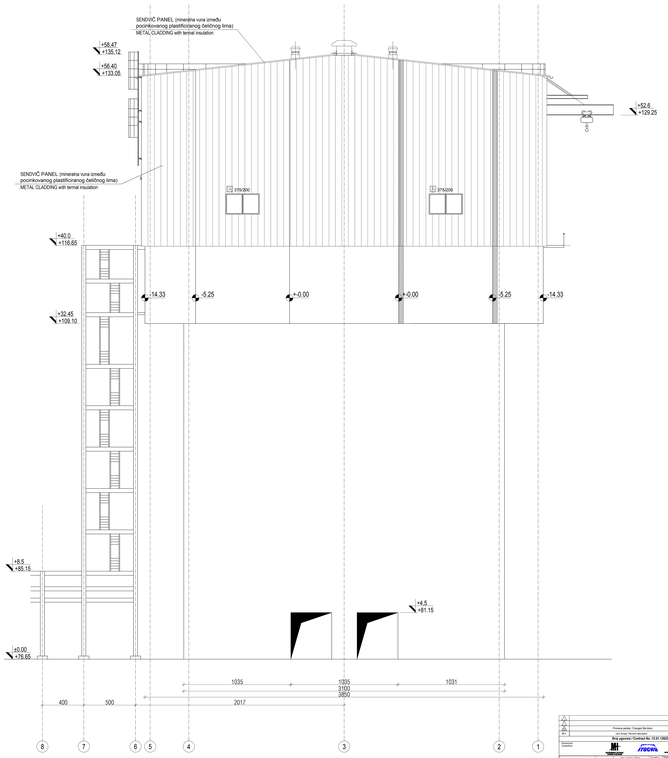

3			
2			
1	Promena podataka / Changed file data	2017.07.04.	D. Stanković
0	Izdato za izradu / Issued for design	2017.06.30.	D. Stanković

Investitor / Investitor: MIN GROUP

Izvođač / Contractor: JUGOMONTAŽA

Projektant / Designer: delta inženjering

Glavni projekat / Main Design: Projekat arhitekture / Architectural Design

Glavni inženjer projekta / Chief Engineer: Dragan Ristić, dipl.inž.arh. 300 0111

Glavni projektant / Chief Designer: Dragan Ristić, dipl.inž.arh. 300 0111

Odgovorni izvođač / Contractor Responsible: Dragan Ristić, dipl.inž.arh. 300 0111

Ime i adresa objekta / Name and address of the building: JP ELEKTROPRIVREDA SRBIJE Belgrade, Serbia, Gypsum Storage Silo

Investicija za EPC ili TK Model Ugovor / PQC Construction Project for TPP Nikola Tesla

Naziv projekta / Project name: Glavni projekat arhitekture / Architectural Design

Sadržaj / Contents: FASADE / FACADES

Broj / Number: 1/100

Datum / Date: 2017.06.

Broj projekta / Project number: NTPSD-01-S-DR-1-0-CB-00-00-0-00

Format: A1

Revizija / Revision: 3

Ovo tehničko rešenje je vlasništvo JP ELEKTROPRIVREDA SRBIJE Beograd, Srbija, Gypsum Storage Silo. Ovo tehničko rešenje ne sme biti korišćeno za bilo koje druge svrhe, niti u celini ili delovima kopirano, umnožavano ili na bilo koji drugi način iskorišćeno bez prethodnog pismenog ovlašćenja JP ELEKTROPRIVREDA SRBIJE Beograd, Srbija, Gypsum Storage Silo.

DISCLAIMER: This technical solution is property of JP ELEKTROPRIVREDA SRBIJE Belgrade, Serbia, Gypsum Storage Silo. This technical solution may not be used for any other purpose, nor in whole or in parts copied, reproduced or in any other way used without prior written consent of JP ELEKTROPRIVREDA SRBIJE Belgrade, Serbia, Gypsum Storage Silo.

OSNOVA PRIZEMLJA / FLOOR PLAN

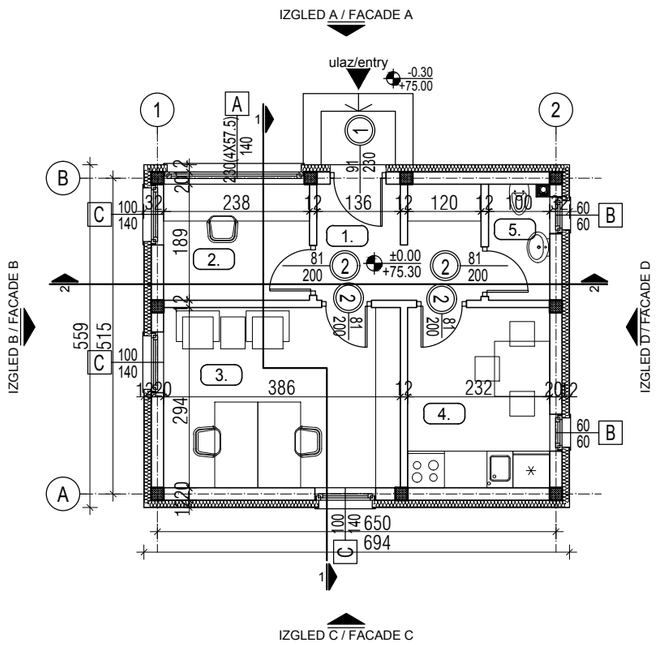

broj / No.	NAMENA PROSTORIJA / ROOMS	površina / area (m²)	obim / perimeter (m')
OSNOVA PRIZEMLJA /GROUND FLOOR ±0.00			
PORTIRNICA/ GATE HOUSE			
1	HODNIK / CORRIDOR	4.95	11.12
2	KANCELARIJA 1 / OFFICE 1	4.50	8.54
3	KANCELARIJA 2 / OFFICE 2	11.35	13.60
4	KUHINJA / KITCHEN	6.82	10.52
5	TOALET / TOILET	1.69	5.78
	UKUPNO / TOTAL:	29.51	49.56
	NETO POVRŠINA PRIZEMLJA / NETO AREA GROUND FLOOR:	29.51	
	BRUTO POVRŠINA PRIZEMLJA / BRUTO AREA GROUND FLOOR:	38.80	
	BRGP / GBA:	38.80	
	POVRŠINA HORIZONTALNE PROJEKCIJE KROVA / AREA HORIZONTAL PROJECTIONS OF THE ROOF:	39.30	

LEGENDA MATERIJALA: / LEGEND:

ARMIRANI BETON	REINFORCED CONCRETE
NABIJENI BETON	LEAN CONCRETE
MRŠAVI BETON /TAMPON/	LEAN CONCRETE
GITER BLOK	CLAY BLOCK
PUNA OPEKA	BRICK BLOCK
FASADNI I KROVNI PANEL	FACADES AND ROOF PANEL
MONTAŽNI PREGRADNI ZID OD GK PLOČA	PREFABRICATED WALL PANELS
TERMOIZOLACIJA	THERMAL INSOLATION
HIDROIZOLACIJA	HYDROISOLATION
ŠLJUNAK	GRAVEL
ČELIČNA KONSTRUKCIJA	STEEL CONSTRUCTION
OLUCI	CHAMFER
DROBLJENI KAMEN	GRAVEL
NABIJENA ZEMLJA	HUDDLE GROUND

KROVNE RAVNI / ROOF PLAN

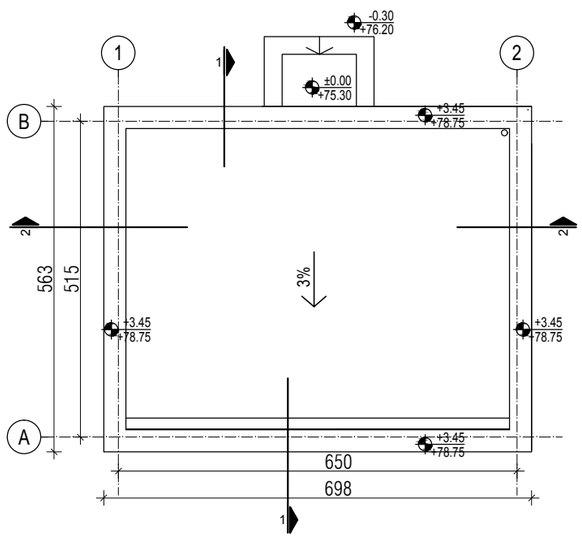

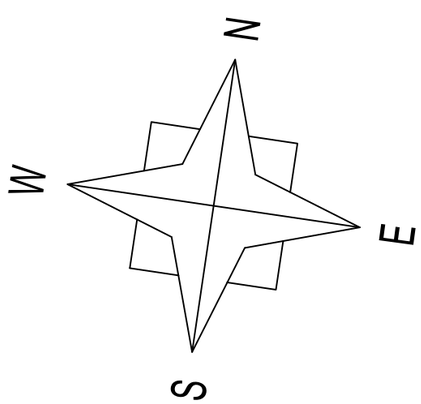

Инжењерска комора Србије
Мирјана Б. Лазић
дипл.инж.арх.
300 4540 03
Одговорни пројектант

REV.	Opis revizije / Revision description	Datum/Date	Crtao/Drawn	Overio/Appr.
-				
-				
01				

Broj ugovora / Contract No :12.01.12625/52-17

Konzorcium:
Consortium:

delta inženjering
www.deltainzenjering.rs

	Ime i prezime / Name	Paraf/Sign.
Odg. projektant: Respon. designer:	Mirjana Lazić dipl.inž.arh.	
Licenca odg.proj.: Res. des. license:	300 4540 03	
Vrsta teh. dok.: Project type:	IDR - Idejno rešenje IDR - Conceptual design	
Datum: Date:	25.01.2018.	Projekcija: Projection:
Deo projekta: Project part:	Projekat arhitekture Arhitectural Design	

Investitor: Client: JP ELEKTROPRIVREDA SRBIJE
PE ELEKTROPRIVREDA SERBIA

Objekat: Complex: Postrojenje za ODG za TE Nikola Tesla A
FGD Construction Project for TPP Nikola Tesla

Postrojenje: Facility: Zona krečnjaka i gipsa
Limestone and gypsum area

Deo postrojenja: Unit: C35-Portirnica
C35-Gate house

Razmera: Scale: **1/100**

Naziv crteža: Drawing name: OSNOVA PRIZEMLJA I OSNOVA KROVNIH RAVNI
FLOOR PLAN AND ROOF PLAN

Crtež broj: Drawing number: **NTFGD-S1.0-IDR-1.0.0-C35-001D-rev00**

List/od: Page/of: **1/4**

Rev. 00

Ime fajla / File name: NTFGD-S1.0-IDR-1.0.0-C35-rev00.dwg

ZA.Q.01 - Rev. 3 - 15.05.15.

PRESEK 1-1

CROSS SECTION 1-1

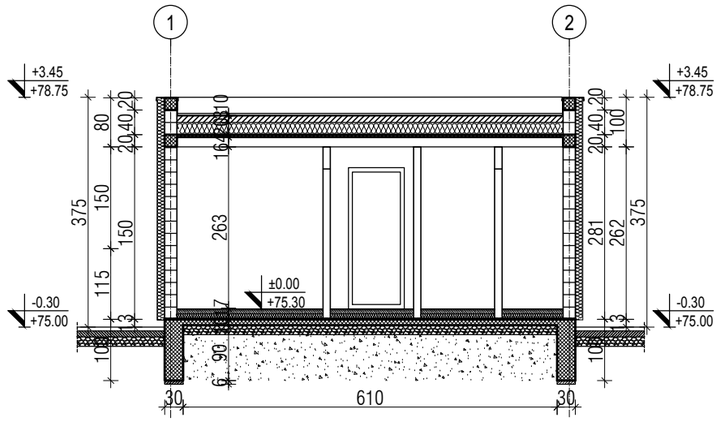

PRESEK 2-2

SECTION 2-2

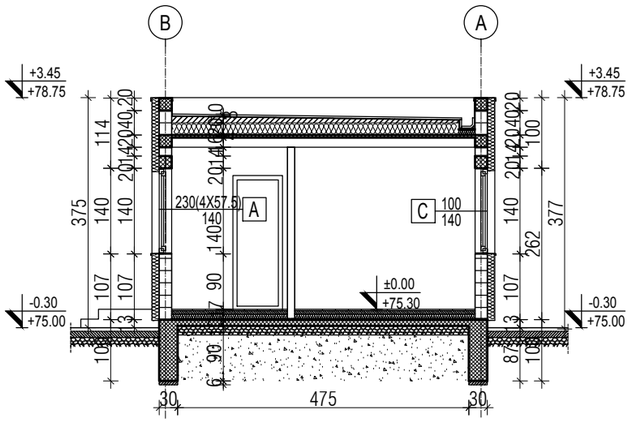

LEGENDA MATERIJALA: LEGEND:

ARMIRANI BETON	REINFORCED CONCRETE
NABIJENI BETON	LEAN CONCRETE
MRŠAVI BETON /TAMPON/	LEAN CONCRETE
GITER BLOK	CLAY BLOCK
PUNA OPEKA	BRICK BLOCK
FASADNI I KROVNI PANEL	FACADES AND ROOF PANEL
MONTAŽNI PREGRADNI ZID OD GK PLOČA	PREFABRICATED WALL PANELS
TERMOIZOLACIJA	THERMAL INSOLATION
HIDROIZOLACIJA	HYDROISOLATION
ŠLJUNAK	GRAVEL
ČELIČNA KONSTRUKCIJA	STEEL CONSTRUCTION
OLUCI	CHAMFER
DROBLJENI KAMEN	GRAVEL
NABIJENA ZEMLJA	HUDDLE GROUND

ИНЖЕЊЕРСКА КОМОРА СРБИЈЕ
Мирјана Б. Лазић
дипл.инж.арх.
300 4540 03
ОВЛАШЋЕНИ ПРОЈЕКТАНТ

REV.	Opis revizije / Revision description	Datum/Date	Crtao/Drawn	Overio/Appr.
-				
-				
01				

Broj ugovora / Contract No :12.01.12625/52-17

Konzorcium:
Consortium:

MITSUBISHI HITACHI POWER SYSTEMS | ITOCHU | MITSUBISHI HITACHI POWER SYSTEMS EUROPE | Jedinstvo

delta inženjering
www.deltainzenjering.rs

	Ime i prezime / Name	Paraf/Sign.
Odg. projektant: Respon. designer:	Mirjana Lazić dipl.inž.arh.	
Licenca odg.proj.: Res. des. license:	300 4540 03	

Vrsta teh. dok.: Project type: IDR - Idejno rešenje / IDR - Conceptual design

Datum: Date: 25.01.2018. Projekcija: Projection:

Deo projekta: Project part: Projekat arhitekture / Arhitectural Design

Investitor: Client: JP ELEKTROPRIVREDA SRBIJE / PE ELEKTROPRIVREDA SERBIA

Objekat: Complex: Postrojenje za ODG za TE Nikola Tesla A / FGD Construction Project for TPP Nikola Tesla

Postrojenje: Facility: Zona krečnjaka i gipsa / Limestone and gypsum area

Deo postrojenja: Unit: C35-Portirnica / C35-Gate house

Razmera: Scale: 1/100

Naziv crteža: Drawing name: PRESECI 1-1, 2-2 / CROSS SECTIONS 1-1, 2-2

Crtež broj: Drawing number: NTFGD-S1.0-IDR-1.0.0-C35-002D-rev00

List/od: Page/of: 2/4

Rev. 00

Ime fajla / File name: NTFGD-S1.0-IDR-1.0.0-C35-rev00.dwg

FASADA A, C
FACADES A, C

FASADA A/ FACADE A

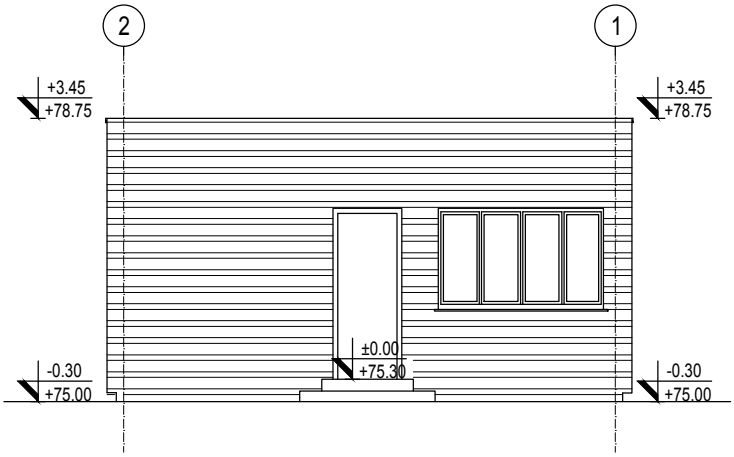

FASADA C / FACADE C

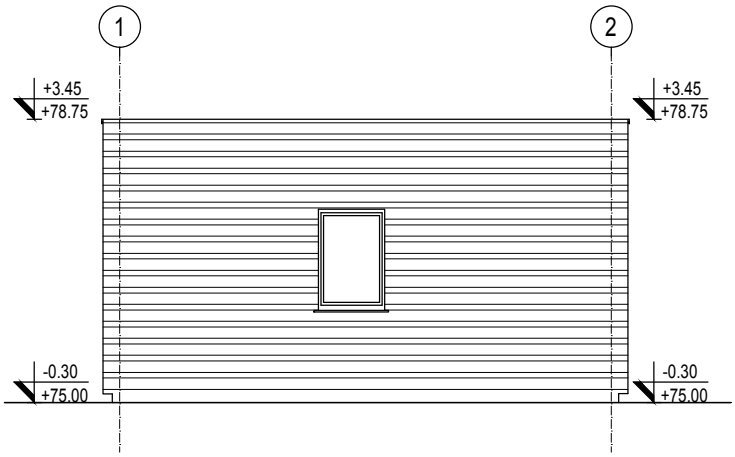

ИНЖЕЊЕРСКА КОМОРА СРБИЈЕ
Мирјана Б. Лазић
дипл.инж.арх.
300 4540 03
ОДГОВОРНИ ПРОЈЕКТАНТ

REV.	Opis revizije / Revision description	Datum/Date	Crtao/Drawn	Overio/Appr.
-				
-				
01				

Broj ugovora / Contract No :12.01.12625/52-17

Konzorcium:
Consortium:

MITSUBISHI HITACHI POWER SYSTEMS | ITOCHU | MITSUBISHI HITACHI POWER SYSTEMS EUROPE | Jedinstvo

delta inženjering
www.deltainzenjering.rs

	Ime i prezime / Name	Paraf/Sign.
Odg. projektant: Respon. designer:	Mirjana Lazić dipl.inž.arh.	
Licenca odg.proj.: Res. des. license:	300 4540 03	

Vrsta teh. dok.: Project type: IDR - Idejno rešenje / IDR - Conceptual design

Datum: Date: 25.01.2018. Projekcija: Projection:

Deo projekta: Project part: Projekat arhitekture / Arhitectural Design

Investitor: Client: JP ELEKTROPRIVREDA SRBIJE / PE ELEKTROPRIVREDA SERBIA

Objekat: Complex: Postrojenje za ODG za TE Nikola Tesla A / FGD Construction Project for TPP Nikola Tesla

Postrojenje: Facility: Zona krečnjaka i gipsa / Limestone and gypsum area

Deo postrojenja: Unit: C35-Portirnica / C35-Gate house

Razmera: Scale: 1/100

Naziv crteža: Drawing name: FASADE A, C / FASADES A, C

Crtež broj: Drawing number: NTFGD-S1.0-IDR-1.0.0-C35-003D-rev00

List/od: Page/of: 3/4

Rev. 00

ZA.Q.01 - Rev. 3 - 15.05.15.

Ime fajla / File name: NTFGD-S1.0-IDR-1.0.0-C35-rev00.dwg

FASADA B, D
FACADES B, D

FASADA B / FACADE B

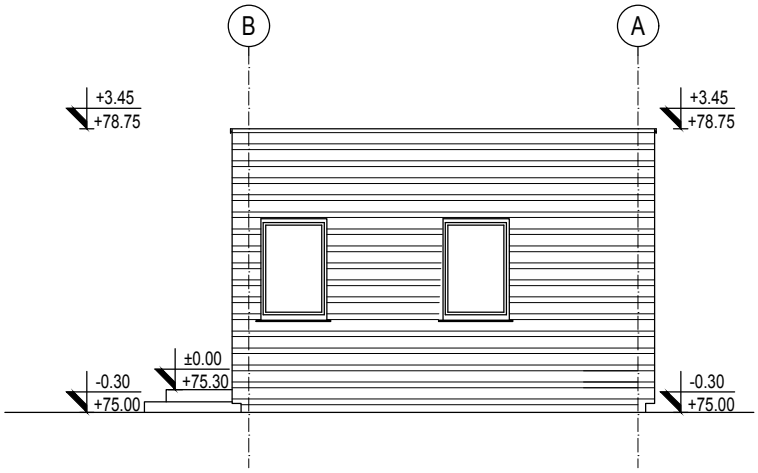

FASADA D / FACADE D

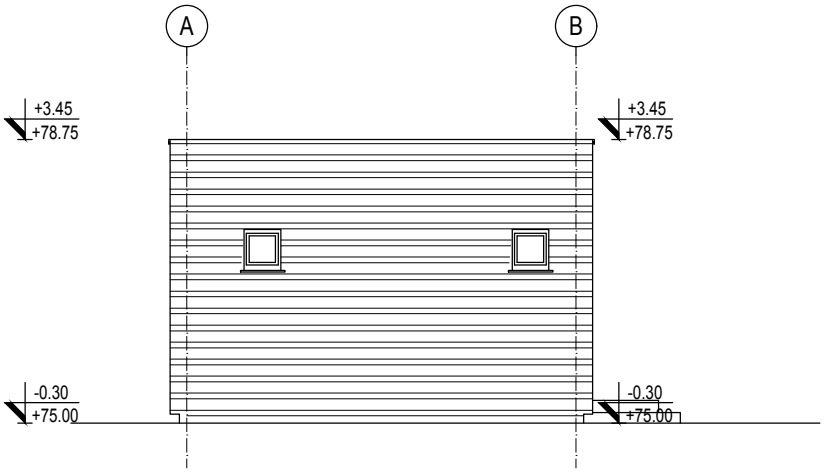

ИНЖЕЊЕРСКА КОМОРА СРБИЈЕ
Мирјана Б. Лазић
дипл.инж.арх.
300 4540 03
ОДГОВОРНИ ПРОЈЕКТАНТ

REV.	Opis revizije / Revision description	Datum/Date	Crtao/Drawn	Overio/Appr.
-				
-				
01				

Broj ugovora / Contract No :12.01.12625/52-17

Konzorcium:
Consortium:

MITSUBISHI HITACHI POWER SYSTEMS | ITOCHU | MITSUBISHI HITACHI POWER SYSTEMS EUROPE | Jedinstvo

delta inženjering
www.deltainzenjering.rs

	Ime i prezime / Name	Paraf/Sign.
Odg. projektant: Respon. designer:	Mirjana Lazić dipl.inž.arh.	
Licenca odg.proj.: Res. des. license:	300 4540 03	

Vrsta teh. dok.: Project type: IDR - Idejno rešenje / IDR - Conceptual design

Datum: Date: 25.01.2018. Projekcija: Projection:

Deo projekta: Project part: Projekat arhitekture / Arhitectural Design

Investitor: Client: JP ELEKTROPRIVREDA SRBIJE / PE ELEKTROPRIVREDA SERBIA

Objekat: Complex: Postrojenje za ODG za TE Nikola Tesla A / FGD Construction Project for TPP Nikola Tesla

Postrojenje: Facility: Zona krečnjaka i gipsa / Limestone and gypsum area

Deo postrojenja: Unit: C35-Portirnica / C35-Gate house

Razmera: Scale: **1/100**

Naziv crteža: Drawing name: FASADE B, D / FASADES B, D

Crtež broj: Drawing number: **NTFGD-S1.0-IDR-1.0.0-C35-004D-rev00**

List/od: Page/of: **4/4**

Rev. 00

Ime fajla / File name: NTFGD-S1.0-IDR-1.0.0-C35-rev00.dwg

ZA.Q.01 - Rev. 3 - 15.05.15.

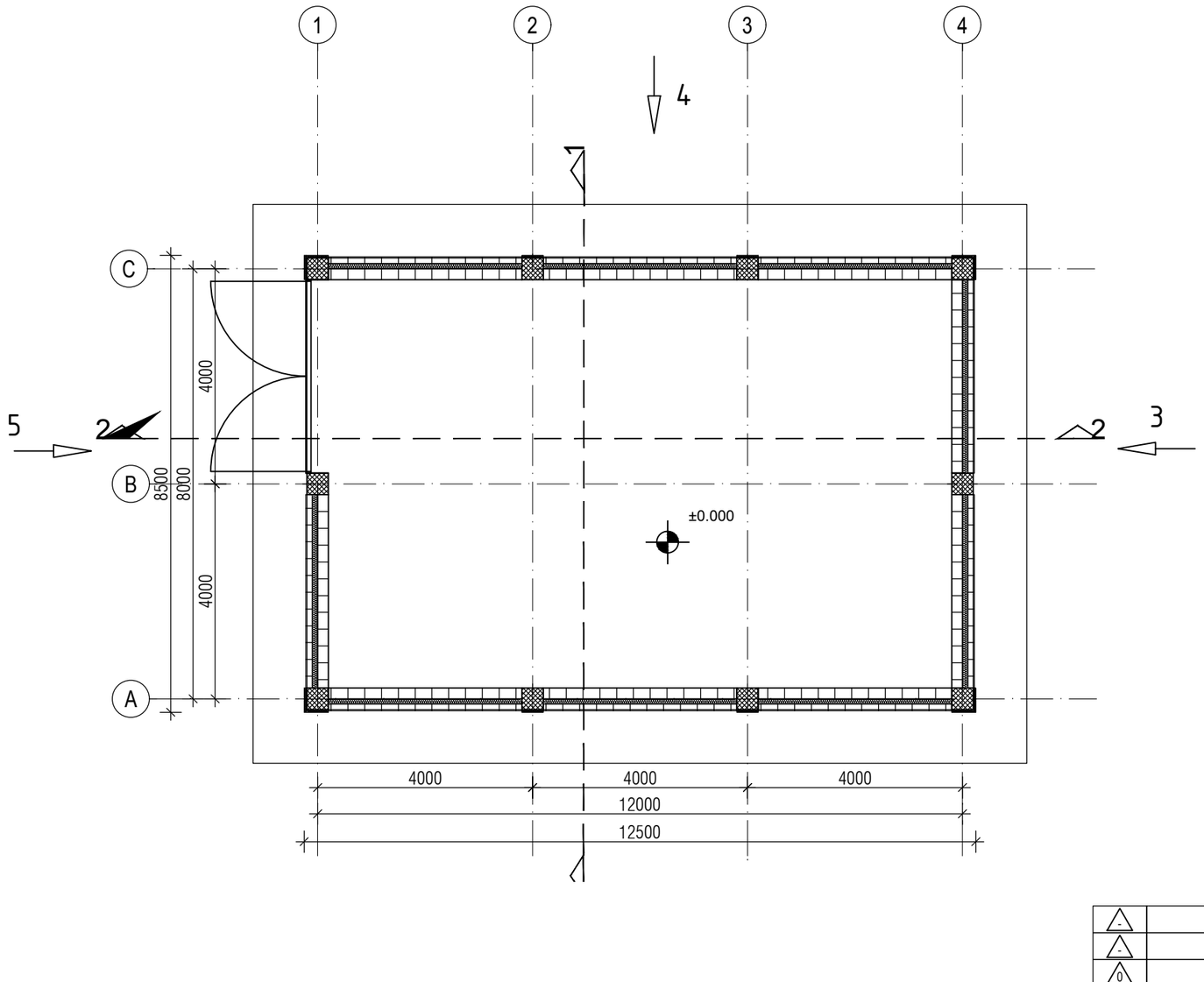

LEGENDA MATERIJALA / LEGEND:

ARMIRANI BETON	REINFORCED CONCRETE
GITER BLOK	CLAY BLOCK
PUNA OPEKA	BRICK BLOCK
TERMOIZOLACIJA	THERMAL INSOLATION

broj/No	NAMENA PROSTORIJA / ROOMS	površina / area (m²)	obim / perimeter (m')
OSNOVA PRIZEMLJA / GROUND FLOOR			
KOMPRESORSKA STANICA / COMPRESSOR STATION			
1	Kompresorska stanica / Compressor station	88.15	38.40
	UKUPNO / TOTAL:	88.15	
	NETO POVRŠINA PRIZEMLJA / NETO AREA GROUND FLOOR:	88.15	
	BRUTO POVRŠINA PRIZEMLJA / BRUTO AREA GROUND FLOOR:	106.25	
	BRGP / GBA:	106,25	
	POVRŠINA HORIZONTALNE PROJEKCIJE KROVA / AREA HORIZONTAL PROJECTIONS OF THE ROOF:	106.25	

ИНЖЕЊЕРСКА КОМОРА СРБИЈЕ
Мирјана Б. Лазић
дипл.инж.арх.
300 4540 03
ОВЛАШЋЕНИ ПРОЈЕКТАНТ

REV.	Opis revizije / Revision description	Datum/Date	Crtao/Drawn	Overio/Appr.
-				
-				
0	---	---		

Broj ugovora / Contract No :**12.01.12625/52-17**

Konzorcium:
Consortium:

MITSUBISHI HITACH POWER SYSTEMS | ITOCHU | MITSUBISHI HITACH POWER SYSTEMS EUROPE | Jedinstvo

delta inženjering
www.deltainzenjering.rs

	Ime i prezime / Name	Paraf/Sign.
Odg. projektant: Respon. designer:	Mirjana Lazić dipl. ing.arh.	
Licenca odg.proj.: Res. des. license:	300 4540 03	

Vrsta teh. dok.: Project type: IDR - Idejno rešenje / IDR - Conceptual design

Datum: Date: 25.01.2017

Projekcija: Projection:

Deo projekta: Project part: Projekat arhitekture / Arhitectural Design

Investitor: Client: JP ELEKTROPRIVREDA SRBIJE / PE ELEKTROPRIVREDA SERBIA

Objekat: Complex: Postrojenje za ODG za TE Nikola Tesla A / FGD Construction Project for TPP Nikola Tesla

Postrojenje: Facility: Zona krečnjaka i gipsa / Limestone and gypsum area

Deo postrojenja: Unit: C36 - Kompresorska stanica / C36 - Compressor station

Razmera: Scale: 1/100

Naziv crteža: Drawing name: OSNOVA PRIZEMLJA / FLOOR PLAN ON ±0.00

Crtež broj: Drawing number: NTFGD-S1.0-IDR-1.0.0-C36-001D-rev00

List/od: Page/of: 1/1

Rev. 0

Ime fajla / File name: NTFGD-S1.0-IDR-1.0.0-C-36-001D-rev00

ZA.Q.01 - Rev. 3 - 15.05.15.

ROOF PLAN - OSNOVA KROVA

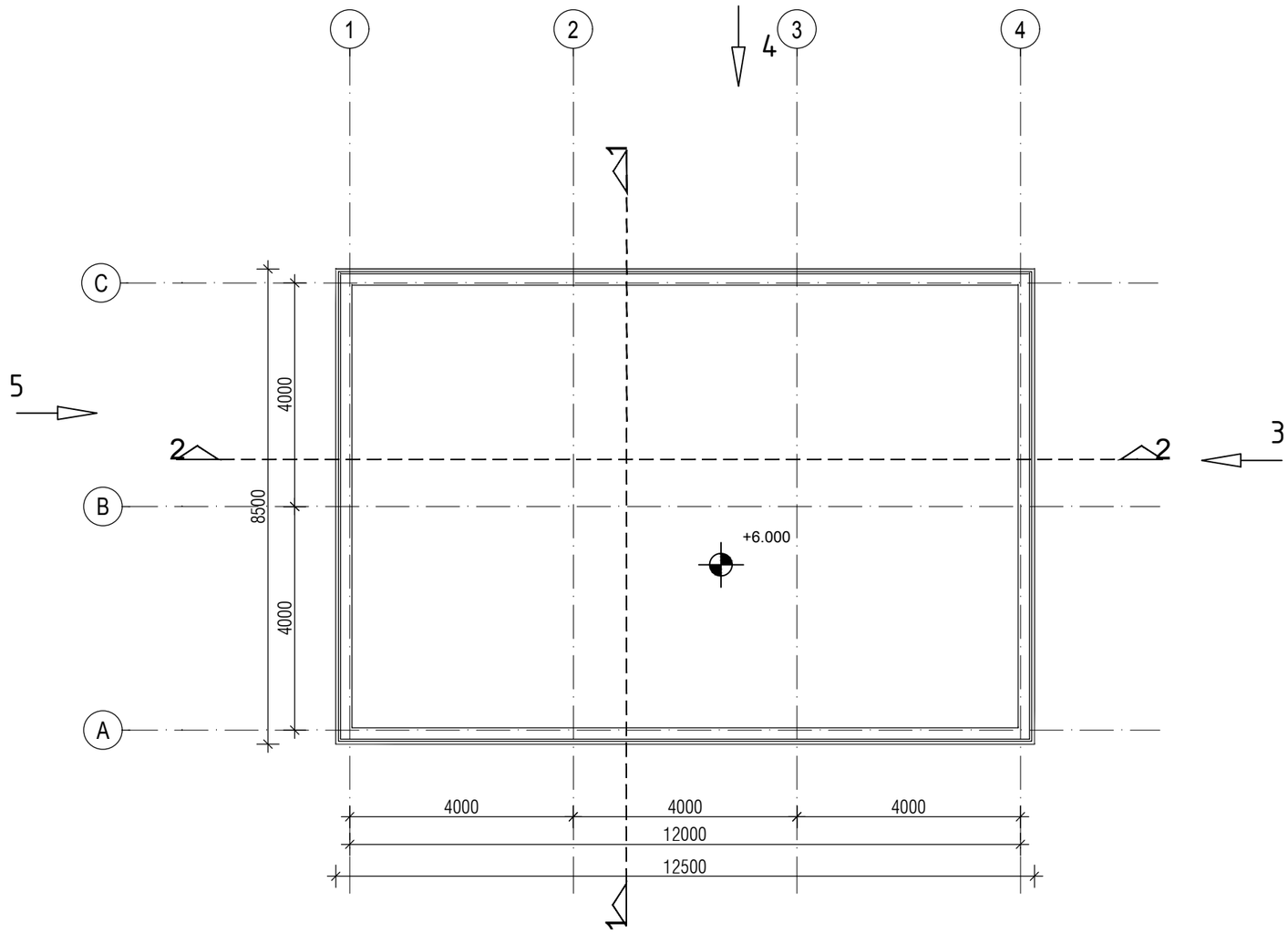

REV.	Opis revizije / Revision description	Datum/Date	Crtao/Drawn	Overio/Appr.
-				
-				
0	---	---	---	

Broj ugovora / Contract No :**12.01.12625/52-17**

Konzorcium:
Consortium:

MITSUBISHI HITACHI POWER SYSTEMS | ITOCHU | MITSUBISHI HITACHI POWER SYSTEMS EUROPE | Jedinstvo

delta inženjering
www.deltainzenjering.rs

	Ime i prezime / Name	Paraf/Sign.
Odg. projektant: Respon. designer:	Mirjana Lazić dipl. ing.arh.	
Licenca odg.proj.: Res. des. license:	300 4540 03	

Vrsta teh. dok.: Project type: IDR - Idejno rešenje / IDR - Conceptual design

Datum: Date: 25.01.2017 | Projekcija: Projection:

Deo projekta: Project part: Projekat arhitekture / Arhitectural Design

Investitor: Client: JP ELEKTROPRIVREDA SRBIJE / PE ELEKTROPRIVREDA SERBIA

Objekat: Complex: Postrojenje za ODG za TE Nikola Tesla A / FGD Construction Project for TPP Nikola Tesla

Postrojenje: Facility: Zona krečnjaka i gipsa / Limestone and gypsum area

Deo postrojenja: Unit: C36 - Kompresorska stanica / C36 - Compressor station

Razmera: Scale: 1/100

Naziv crteža: Drawing name: OSNOVA KROVA / ROOF PLAN

Crtež broj: Drawing number: NTFGD-S1.0-IDR-1.0.0-C36-002D-rev00

List/od: Page/of: 2/4

Rev. 0

ZA.Q.01 - Rev. 3 - 15.05.15.

Ime fajla / File name: NTFGD-S1.0-IDR-1.0.0-C.36-002D-rev00

Инжењерска комора Србије
Мирјана Б. Лазић
дипл.инж.арх.
300 4540 03
Одговорни пројектант

SECTION 1-1
PRESEK 1-1

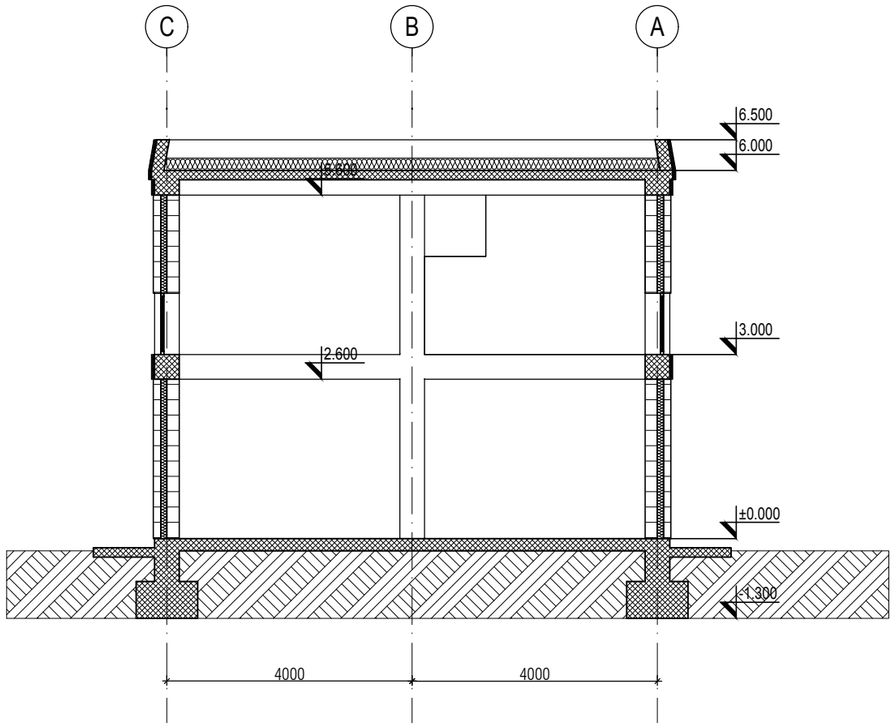

SECTION 2-2
PRESEK 2-2

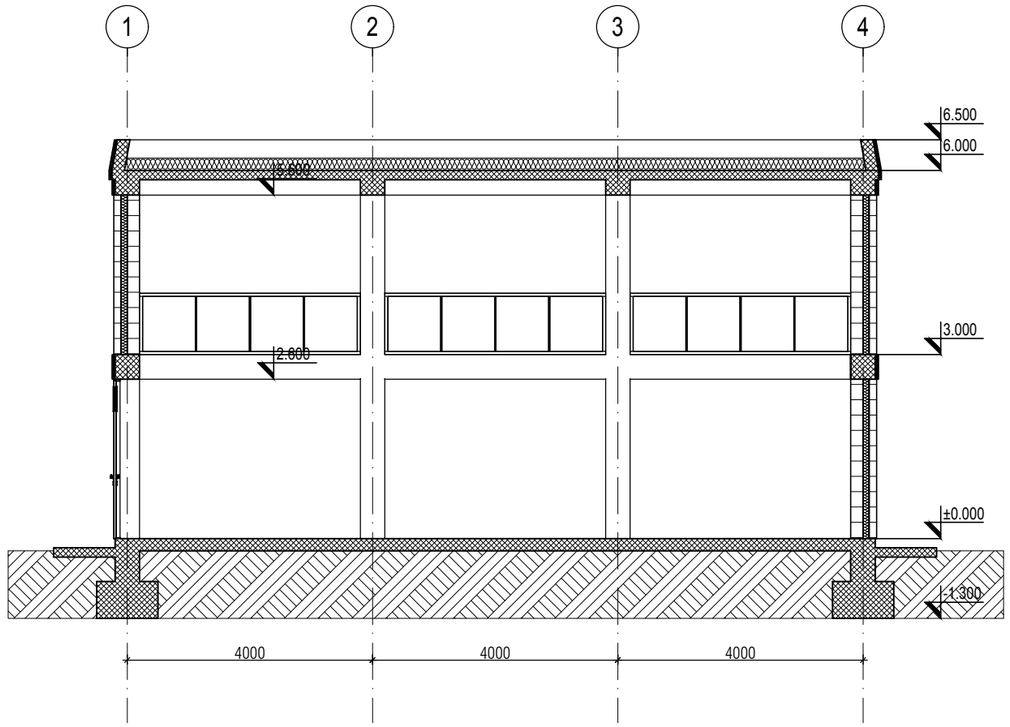

ИНЖЕЊЕРСКА КОМОРА СРБИЈЕ
Мирјана Б. Лазић
дипл.инж.арх.
300 4540 03
ОВЛАШЋЕНИ ПРОЈЕКТАНТ

REV.	Opis revizije / Revision description	Datum/Date	Crtao/Drawn	Overio/Appr.
-				
-				
0	---	---	---	

Broj ugovora / Contract No :**12.01.12625/52-17**

Konzorcium:
Consortium:

MITSUBISHI HITACHI POWER SYSTEMS | ITOCHU | MITSUBISHI HITACHI POWER SYSTEMS EUROPE | Jedinstvo

delta inženjering
www.deltainzenjering.rs

	Ime i prezime / Name	Paraf/Sign.
Odg. projektant: Respon. designer:	Mirjana Lazić dipl. ing.arh.	
Licenca odg.proj.: Res. des. license:	300 4540 03	

Vrsta teh. dok.: Project type: IDR - Idejno rešenje / IDR - Conceptual design

Datum: Date: 25.01.2017

Projekcija: Projection:

Deo projekta: Project part: Projekat arhitekture / Arhitectural Design

Investitor: Client: JP ELEKTROPRIVREDA SRBIJE / PE ELEKTROPRIVREDA SERBIA

Objekat: Complex: Postrojenje za ODG za TE Nikola Tesla A / FGD Construction Project for TPP Nikola Tesla

Postrojenje: Facility: Zona krečnjaka i gipsa / Limestone and gypsum area

Deo postrojenja: Unit: C36 - Kompresorska stanica / C36 - Compressor station

Razmera: Scale: 1/100

Naziv crteža: Drawing name: PRESECI 1-1 I 2-2 / SECTIONS 1-1 & 2-2

Crtež broj: Drawing number: NTFGD-S1.0-IDR-1.0.0-C36-003D-rev00

List/od: Page/of: 3/4

Rev. 0

Ime fajla / File name: NTFGD-S1.0-IDR-1.0.0-C36-003D-rev00

ZA.Q.01 - Rev. 3 - 15.05.15.

VIEW 3
POGLED 3

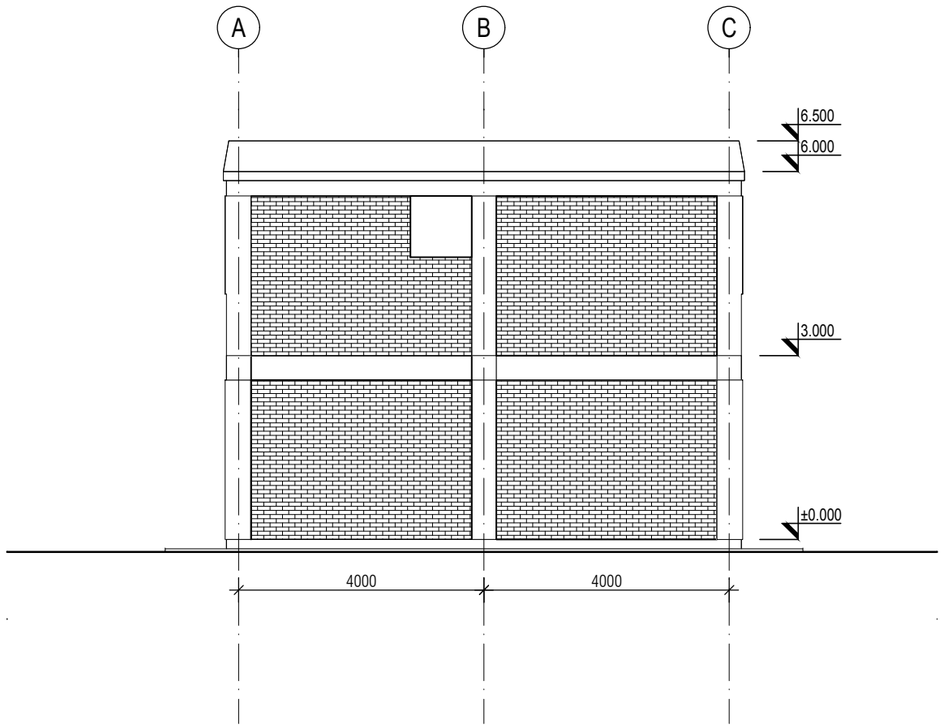

VIEW 4
POGLED 4

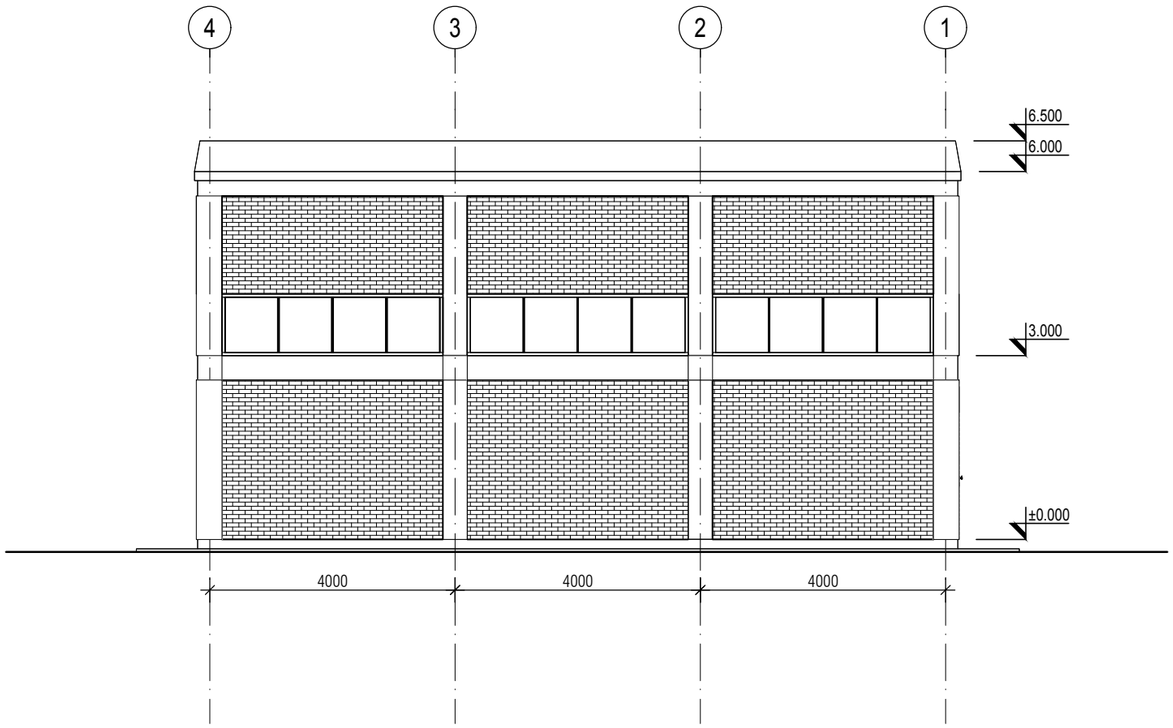

VIEW 5
POGLED 5

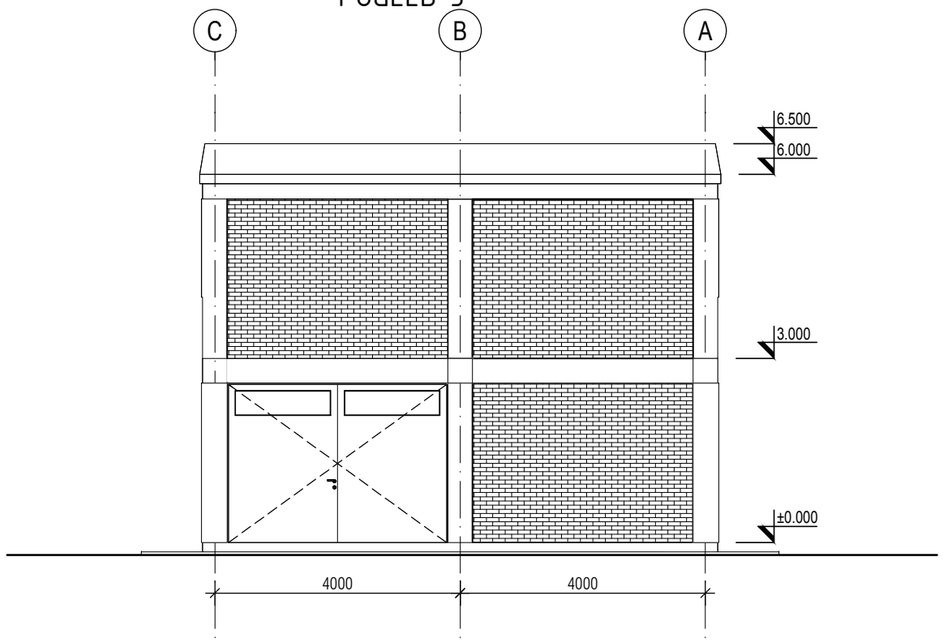

REV.	Opis revizije / Revision description	Datum/Date	Crtao/Drawn	Overio/Appr.
-				
-				
0	---	---	---	

Broj ugovora / Contract No :**12.01.12625/52-17**

Konzorcium:
Consortium:

MITSUBISHI HITACHI POWER SYSTEMS | ITOCHU | MITSUBISHI HITACHI POWER SYSTEMS EUROPE | Jedinstvo

delta inženjering
www.deltainzenjering.rs

	Ime i prezime / Name	Paraf/Sign.
Odg. projektant: Respon. designer:	Mirjana Lazić dipl. ing.arh.	
Licenca odg.proj.: Res. des. license:	300 4540 03	

Vrsta teh. dok.: Project type: IDR - Idejno rešenje / IDR - Conceptual design

Datum: Date: 25.01.2017

Projekcija: Projection:

Deo projekta: Project part: Projekat arhitekture / Arhitectural Design

Investitor: Client: JP ELEKTROPRIVREDA SRBIJE / PE ELEKTROPRIVREDA SERBIA

Objekat: Complex: Zona krečnjaka i gipsa / Limestone and gypsum area

Postrojenje: Facility: C36 - Kompresorska stanica / C36 - Compressor station

Deo postrojenja: Unit:

Razmera: Scale: 1/100

Naziv crteža: Drawing name: FASADE (POGLEDI 3, 4 I 5) / FACADES (VIEWS 3, 4 & 5)

Crtež broj: Drawing number: NTFGD-S1.0-IDR-1.0.0-C36-004D-rev00

List/od: Page/of: 4/4

Rev. 0

Inženjerska komora Srbije * Ovlašćeni projektant *
Мирјана Б. Лазић
дипл.инж.арх.
300 4540 03

Ime fajla / File name: NTFGD-S1.0-IDR-1.0.0-C36-004D-rev00

ZA.Q.01 - Rev. 3 - 15.05.15.

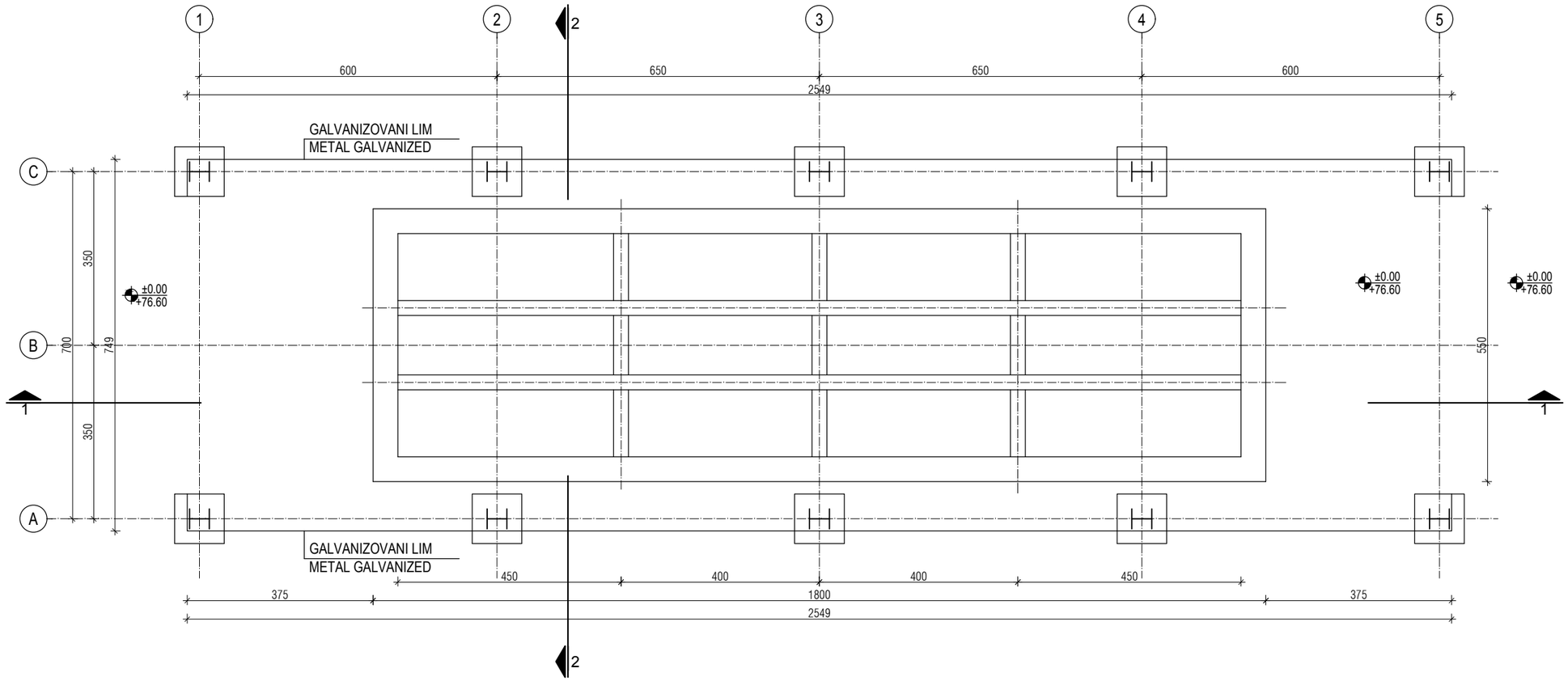

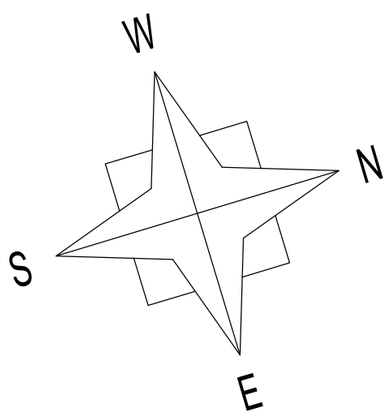

REV.	Opis revizije / Revision description	Datum/Date	Crtao/Drawn	Overio/Appr.
-				
-				
01				

Broj ugovora / Contract No :12.01.12625/52-17

Konzorcium:
Consortium:

MITSUBISHI HITACHI POWER SYSTEMS | ITOCHU | MITSUBISHI HITACHI POWER SYSTEMS EUROPE | Jedinstvo

delta inženjering
www.deltainzenjering.rs

	Ime i prezime / Name	Paraf/Sign.
Odg. projektant: Respon. designer:	Mirjana Lazić dipl.inž.arh.	
Licenca odg.proj.: Res. des. license:	300 4540 03	

Vrsta teh. dok.: Project type: IDR - Idejno rešenje / IDR - Conceptual design

Datum: Date: 25.01.2018.

Projekcija: Projection:

Deo projekta: Project part: Projekat arhitekture / Arhitectural Design

Investitor: Client: JP ELEKTROPRIVREDA SRBIJE / PE ELEKTROPRIVREDA SERBIA

Objekat: Complex: Postrojenje za ODG za TE Nikola Tesla A / FGD Construction Project for TPP Nikola Tesla

Postrojenje: Facility: Zona krečnjaka i gipsa / Limestone and gypsum area

Deo postrojenja: Unit: C39-Istovarna stanica krečnjaka za vagone / C39-Limestone railway unloading

Razmera: Scale: **1/100**

Naziv crteža: Drawing name: OSNOVA PRIZEMLJA / GROUND FLOOR PLAN

Crtež broj: Drawing number: **NTFGD-S1.0-IDR-1.0.0-C39-001D-rev00**

List/od: Page/of: **1/4**

Rev. 00

ИНЖЕЊЕРСКА КОМОРА СРБИЈЕ
Мирјана Б. Лазић
дипл.инж.арх.
300 4540 03
ОВЛАШЋЕНИ ПРОЈЕКТАНТ

Ime fajla / File name: NTFGD-S1.0-IDR-1.0.0-C39-rev00.dwg

ZA.Q.01 - Rev. 3 - 15.05.15.

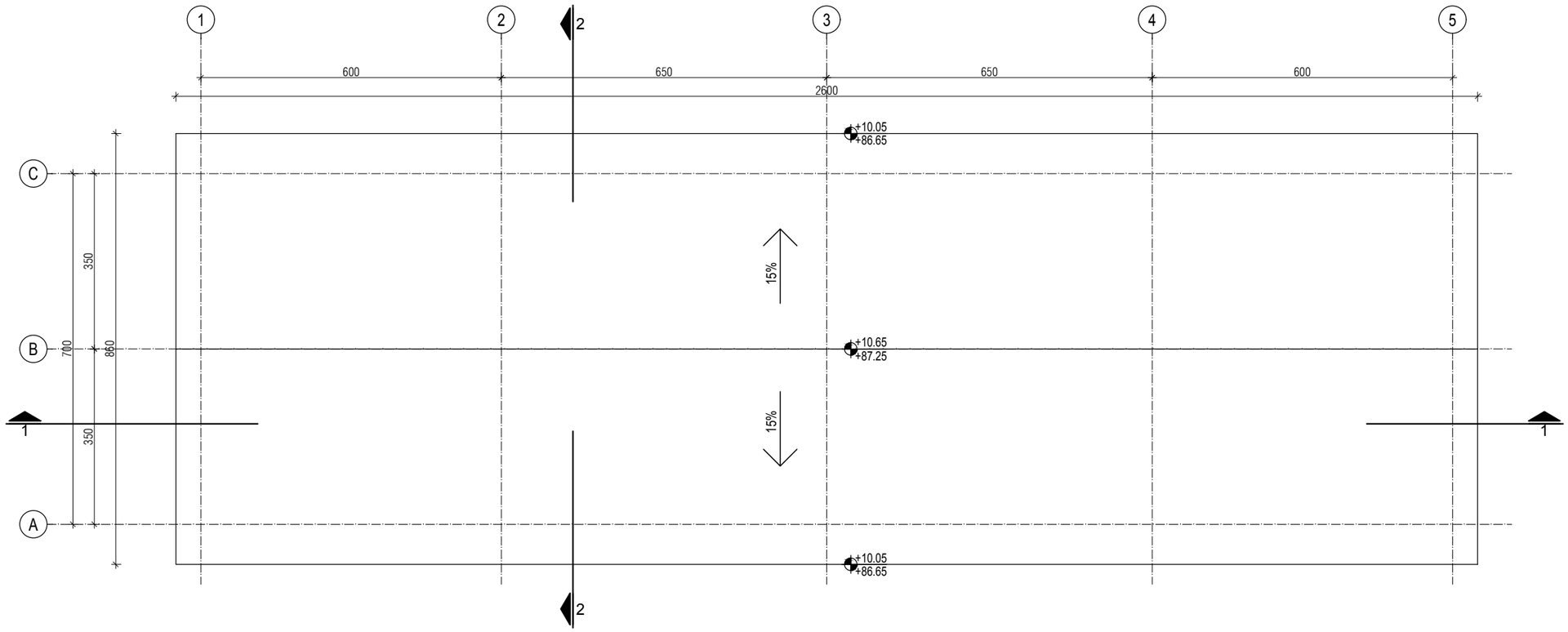

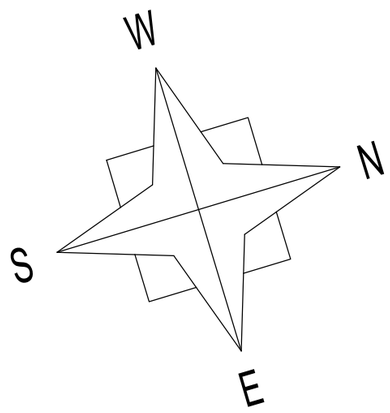

REV.	Opis revizije / Revision description	Datum/Date	Crtao/Drawn	Overio/Appr.
-				
-				
01				

Broj ugovora / Contract No :12.01.12625/52-17

Konzorcium:
Consortium:

delta inženjering
www.deltainzenjering.rs

	Ime i prezime / Name	Paraf/Sign.
Odg. projektant: Respon. designer:	Mirjana Lazić dipl.inž.arh.	
Licenca odg.proj.: Res. des. license:	300 4540 03	

Vrsta teh. dok.: Project type: IDR - Idejno rešenje / IDR - Conceptual design

Datum: Date: 25.01.2018.

Projekcija: Projection:

Deo projekta: Project part: Projekat arhitekture / Arhitectural Design

Investitor: Client: JP ELEKTROPRIVREDA SRBIJE / PE ELEKTROPRIVREDA SERBIA

Objekat: Complex: Postrojenje za ODG za TE Nikola Tesla A / FGD Construction Project for TPP Nikola Tesla

Postrojenje: Facility: Zona krečnjaka i gipsa / Limestone and gypsum area

Deo postrojenja: Unit: C39-Istovarna stanica za vagone / C39-Limestone railway unloading

Razmera: Scale: 1/100

Naziv crteža: Drawing name: OSNOVA KROVNIH RAVNI / ROOF PLAN

Crtež broj: Drawing number: NTFGD-S1.0-IDR-1.0.0-C39-002D-rev00

List/od: Page/of: 2/4

Rev. 00

Inženjerska komora Srbije — Ovlašćeni projektant — Мирјана Б. Лазић дипл.инж.арх. 300 4540 03

Ime fajla / File name: NTFGD-S1.0-IDR-1.0.0-C39-rev00.dwg

ZA.Q.01 - Rev. 3 - 15.05.15.

PRESEK 1-1 / SECTION 1-1

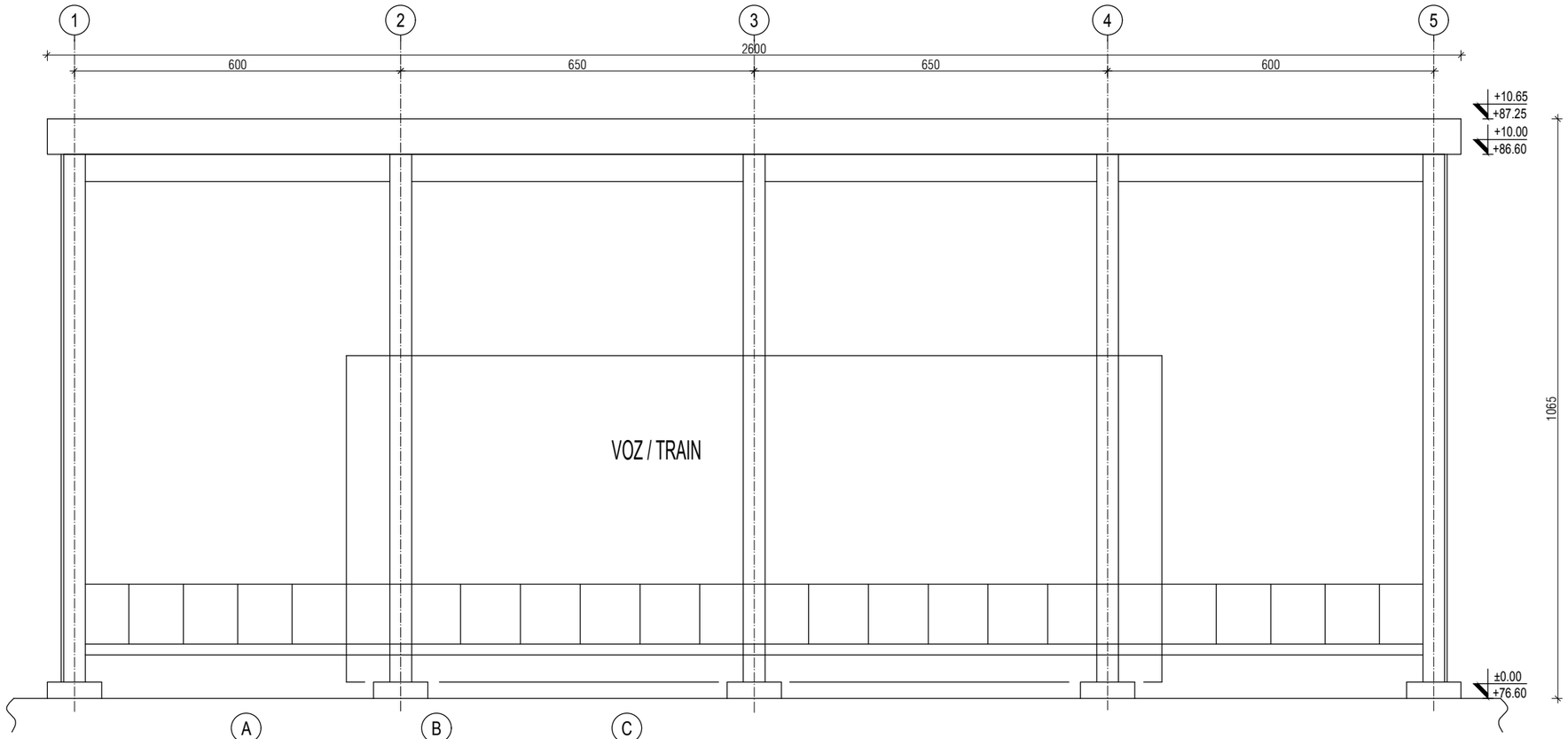

SECTION 2-2 / PRESEK 2-2

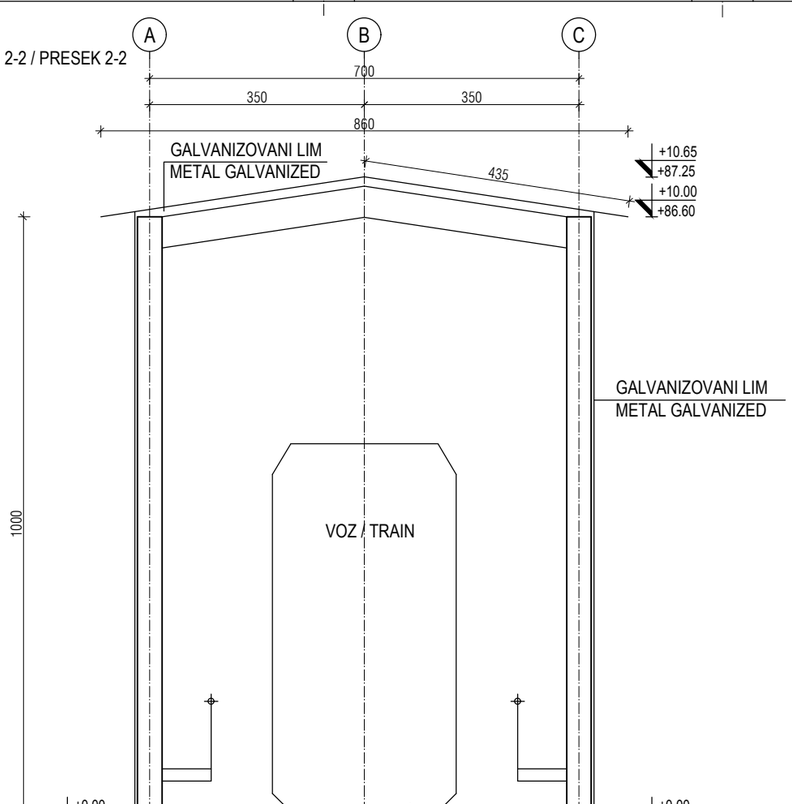

REV.	Opis revizije / Revision description	Datum/Date	Crtao/Drawn	Overio/Appr.
-				
-				
01				

Broj ugovora / Contract No :12.01.12625/52-17

Konzorcium:
Consortium:

MITSUBISHI HITACHI POWER SYSTEMS · ITOCHU · MITSUBISHI HITACHI POWER SYSTEMS EUROPE · Jedinstvo

delta inženjering
www.deltainzenjering.rs

	Ime i prezime / Name	Paraf/Sign.
Odg. projektant: Respon. designer:	Mirjana Lazić dipl.inž.arh.	
Licenca odg.proj.: Res. des. license:	300 4540 03	

Vrsta teh. dok.: Project type: IDR - Idejno rešenje / IDR - Conceptual design

Datum: Date: 25.01.2018. Projekcija: Projection:

Deo projekta: Project part: Projekat arhitekture / Arhitectural Design

Investitor: Client: JP ELEKTROPRIVREDA SRBIJE / PE ELEKTROPRIVREDA SERBIA

Objekat: Complex: Postrojenje za ODG za TE Nikola Tesla A / FGD Construction Project for TPP Nikola Tesla

Postrojenje: Facility: Zona krečnjaka i gipsa / Limestone and gypsum area

Deo postrojenja: Unit: C39-Istovarna stanica za vagone / C39-Limestone railway unloading

Razmera: Scale: **1/100**

Naziv crteža: Drawing name: PRESECI 1-1, 2-2 / CROSS SECTIONS 1-1, 2-2

Crtež broj: Drawing number: **NTFGD-S1.0-IDR-1.0.0-C39-003D-rev00**

List/od: Page/of: **3/4**

Rev. 00

ИНЖЕЊЕРСКА КОМОРА СРБИЈЕ · ОВЛАШЋЕНИ ПРОЈЕКТАНТ · Мирјана Б. Лазић дипл.инж.арх. 300 4540 03

Ime fajla / File name: NTFGD-S1.0-IDR-1.0.0-C39-rev00.dwg

ZA.Q.01 - Rev. 3 - 15.05.15.

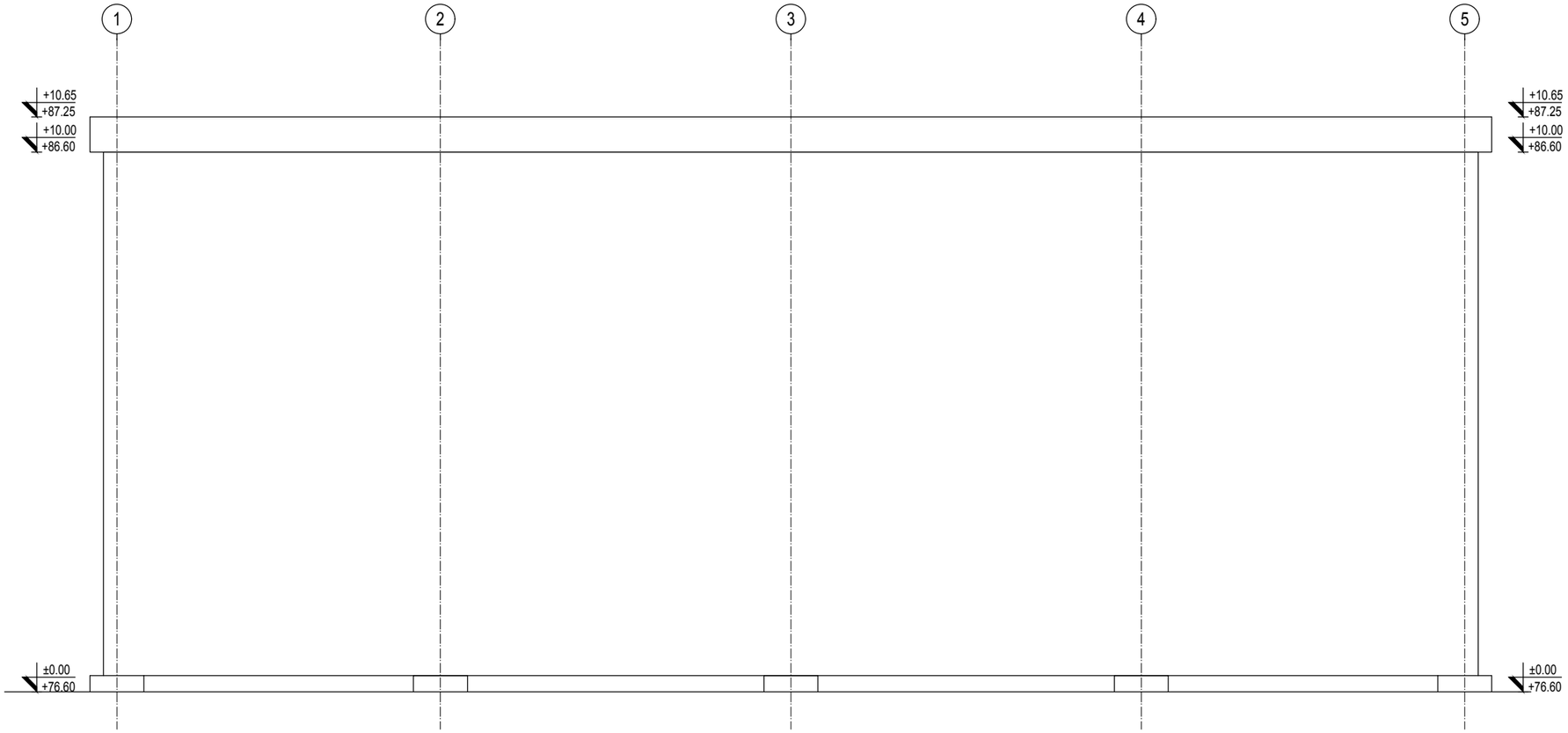

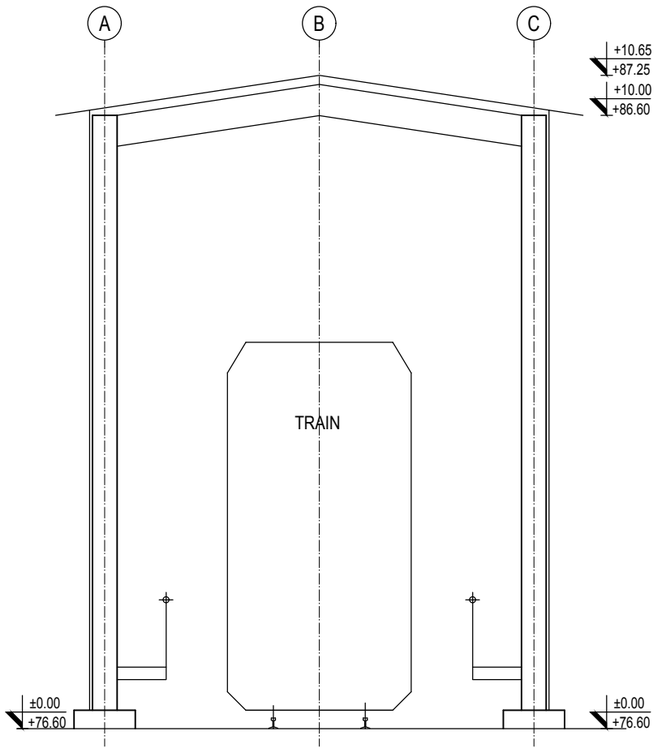

REV.	Opis revizije / Revision description	Datum/Date	Crtao/Drawn	Overio/Appr.
-				
-				
01				

Broj ugovora / Contract No :12.01.12625/52-17

Konzorcium:
Consortium:

MITSUBISHI HITACHI POWER SYSTEMS | ITOCHU | MITSUBISHI HITACHI POWER SYSTEMS EUROPE | Jedinstvo

delta inženjering
www.deltainzenjering.rs

	Ime i prezime / Name	Paraf/Sign.
Odg. projektant: Respon. designer:	Mirjana Lazić dipl.inž.arh.	
Licenca odg.proj.: Res. des. license:	300 4540 03	
Vrsta teh. dok.: Project type:	IDR - Idejno rešenje IDR - Conceptual design	
Datum: Date:	25.01.2018.	Projekcija: Projection:
Deo projekta: Project part:	Projekat arhitekture Arhitectural Design	

Investitor: Client: JP ELEKTROPRIVREDA SRBIJE
PE ELEKTROPRIVREDA SERBIA

Objekat: Complex: Postrojenje za ODG za TE Nikola Tesla A
FGD Construction Project for TPP Nikola Tesla

Postrojenje: Facility: Zona krečnjaka i gipsa
Limestone and gypsum area

Deo postrojenja: Unit: C39-Istovarna stanica za vagone
C39-Limestone railway unloading

Razmera: Scale: **1/100**

Naziv crteža: Drawing name: FASADE
FACADES

Crtež broj: Drawing number: **NTFGD-S1.0-IDR-1.0.0-C39-004D-rev00**

List/od: Page/of: **4/4**

Rev. 00

ИНЖЕЊЕРСКА КОМОРА СРБИЈЕ
Мирјана Б. Лазић
дипл.инж.арх.
300 4540 03
ОВЛАШЋЕНИ ПРОЈЕКТАНТ

Ime fajla / File name: NTFGD-S1.0-IDR-1.0.0-C39-rev00.dwg

ZA.Q.01 - Rev. 3 - 15.05.15.

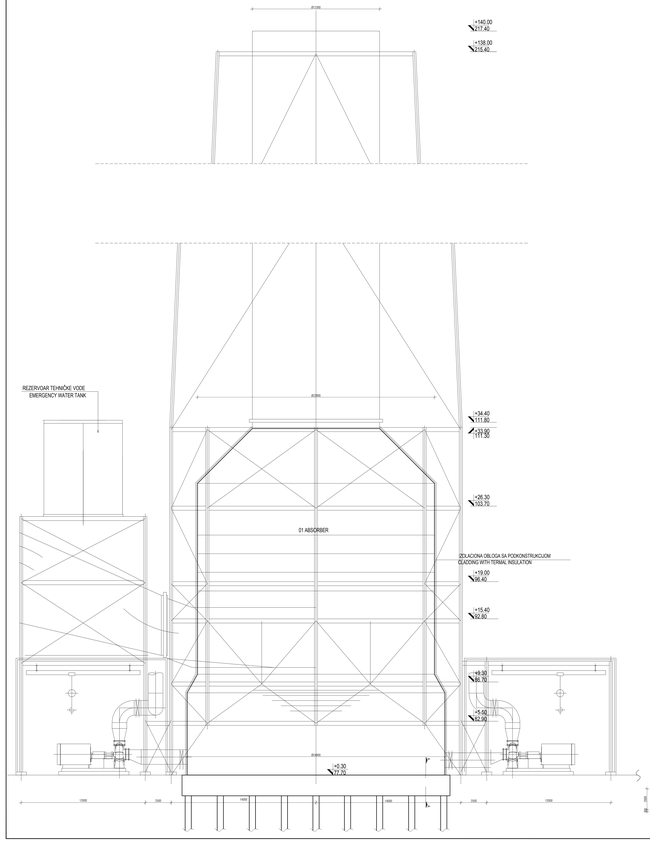

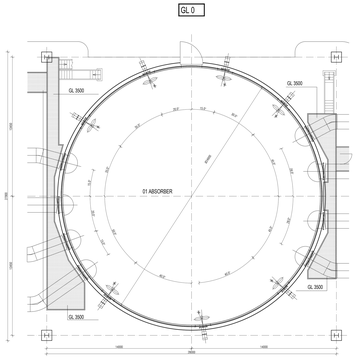

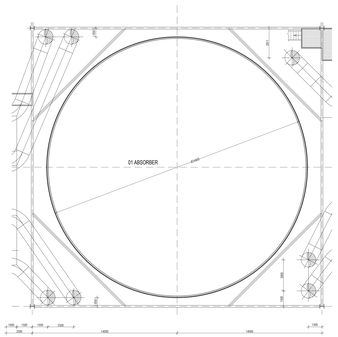

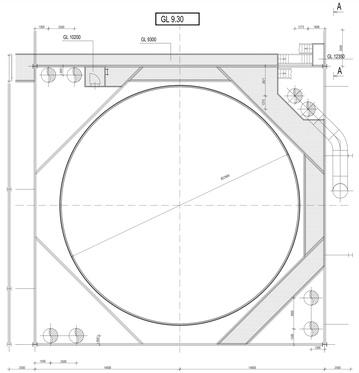

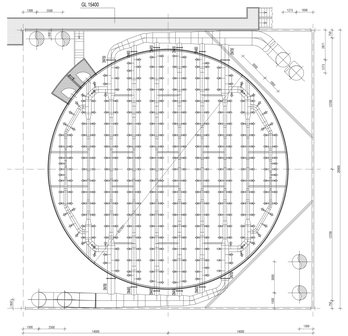

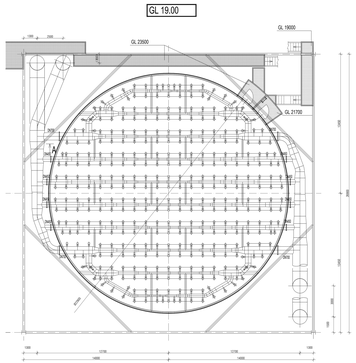

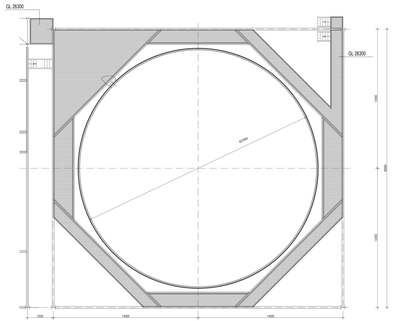

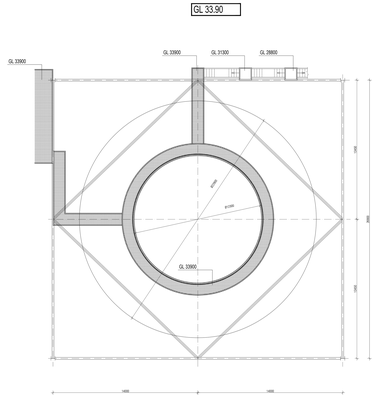

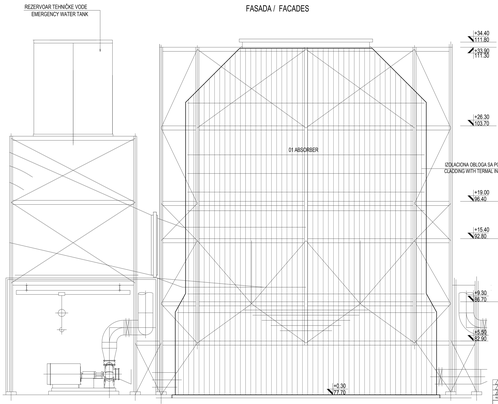

ABSORBER C1 (A1) /ABSORBER C1 (A1)
OSNOVE, PRESEK, FASADA / FLOOR PLAN, CROSS SECTION, FACADES

broj/no	NAMENA PROSTORIJA / ROOMS	površina / area (m²)	visina / perimeter (m¹)
	OSNOVA ABSORBERA / ABSORBER PLAN		
	ABSORBER C1 (A1) / ABSORBER C1 (A1)		
1	Platforma nivo 0.00 / Platform level 0.00	64.18	54.76
2	Platforma nivo +5.50 / Platform level +5.50	3.90	7.90
3	Platforma nivo +9.30 / Platform level +9.30	124.63	114.98
4	Platforma nivo +15.40 / Platform level +15.40	37.20	62.68
5	Platforma nivo +19.00 / Platform level +19.00	48.69	80.00
6	Platforma nivo +26.30 / Platform level +26.30	167.83	190.17
7	Platforma nivo +33.90 / Platform level +33.90	77.71	134.00
8	Stepenice/Stairs	70.00	105.00
	UKUPNO / TOTAL:	594.24	
	BRUTO POVRŠINA PLATFORMI / BRUTO AREA PLATFORM:	594.24	
	BRUTO POVRŠINA TEMELJA / BRUTO AREA FOUNDATION:	831.00	
	BRGP / GBA:	1.425.24	

01	20.12.2021.	Izdato za izvođenje / Issued for construction	
00	15.12.2021.	Izdato za izvođenje / Issued for construction	
Rev.	Datum / Date	Opis / Description	Izdao / Issued by

Investitor / Client: Ministarstvo energetike / Ministry of Energy
Generalni projektant / General Designer: Institut IMS d.d. Sarajevo
Glavni izvođač / Main Contractor: Konsorcij Hidroelektrana Ustikolina
Nadzor / Supervision: Institut IMS d.d. Sarajevo
Revizija / Review: Institut IMS d.d. Sarajevo
Ovjera / Approval: Federalno ministarstvo energije, rudarstva i industrije

Izvođač / Contractor: Konsorcij Hidroelektrana Ustikolina
Projektant / Designer: delta inženjering d.o.o. Sarajevo
www.deltainzenjering.ba

Naziv projekta / Project name: HE UGLJEVIK RIJEKA SIBINJ
Lokacija / Location: Ugljevik, Lokalitet Rijeka sibinj
Faza projekta / Project phase: Izvođačka dokumentacija / Construction Project for TPP Mirate Tesla
Vrsta dokumenta / Document type: PROJEKTNI ZADATAK / PROJECT TASK
Naziv dokumenta / Document name: C1-ABSORBER (1x72) C1-ABSORBER (1x72)
Razmjera / Scale: 1:100
Datum izrade / Date of issue: 20.12.2021.
Broj nacrta / Drawing number: 6170-D-E-1-00-1-0-0-1-0012-0a-00
Revizija / Revision: 00
Broj priloga / Attachment number:
Potpis / Signature:
Ovjera / Stamp:
Ovjeravanje / Certification: Ministarstvo energije, rudarstva i industrije Federacije BiH
Broj ugovora / Contract No.: 12-07-1300/20-17
Nacrtao / Drawn by: Pregled arhitekta / Architect Design
Mjerilo / Scale: 1:100
Naziv nacrta / Drawing name: OSNOVA, PRESEK I FASADE / PLAN, CROSS SECTIONS, FACADES
Broj nacrta / Drawing number: 6170-D-E-1-00-1-0-0-1-0012-0a-00

ABSORBER C2 (A2) ABSORBER C2 (A2)
OSNOVE, PRESEK, FASADA / FLOOR PLAN, CROSS SECTION, FACADES

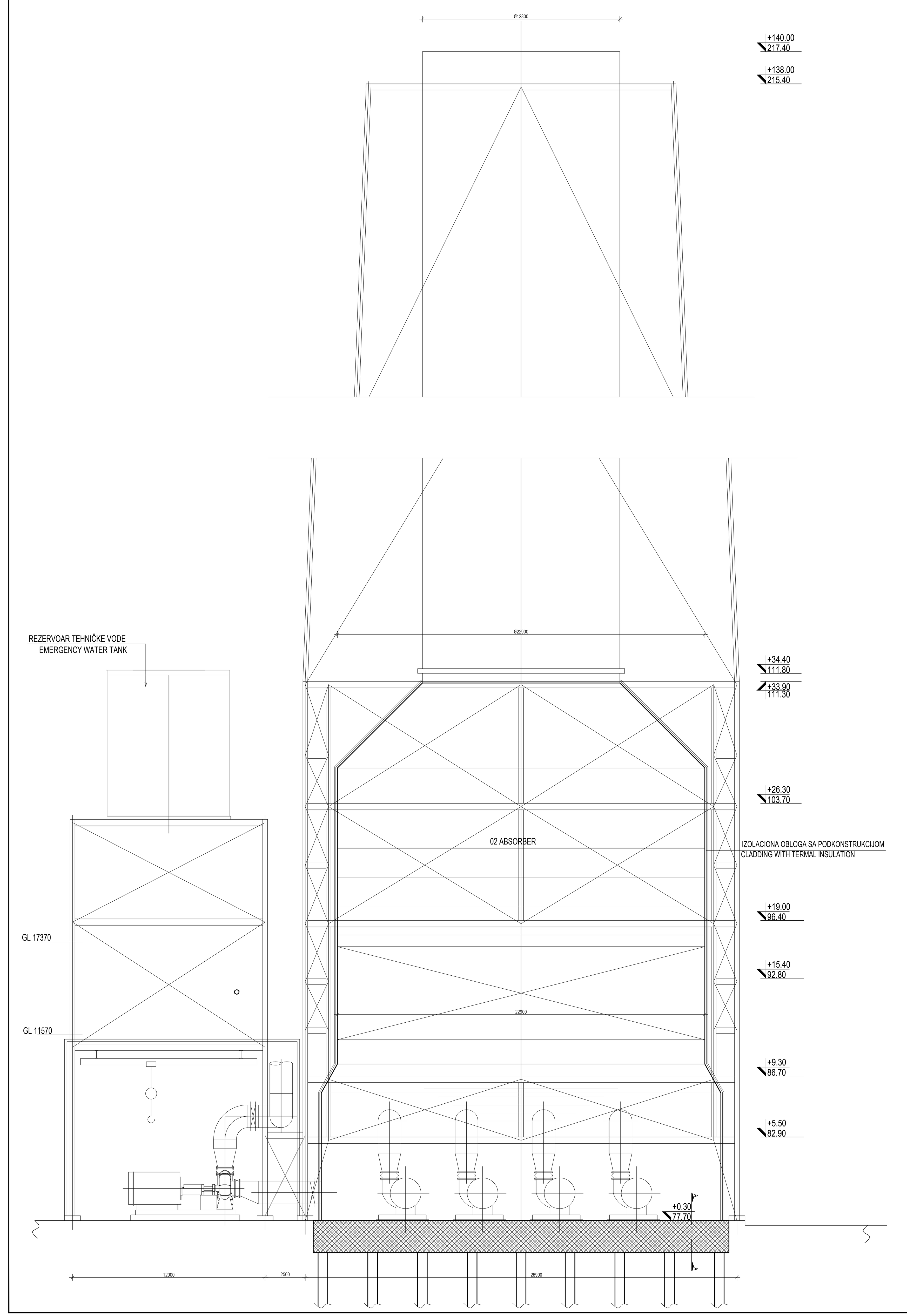

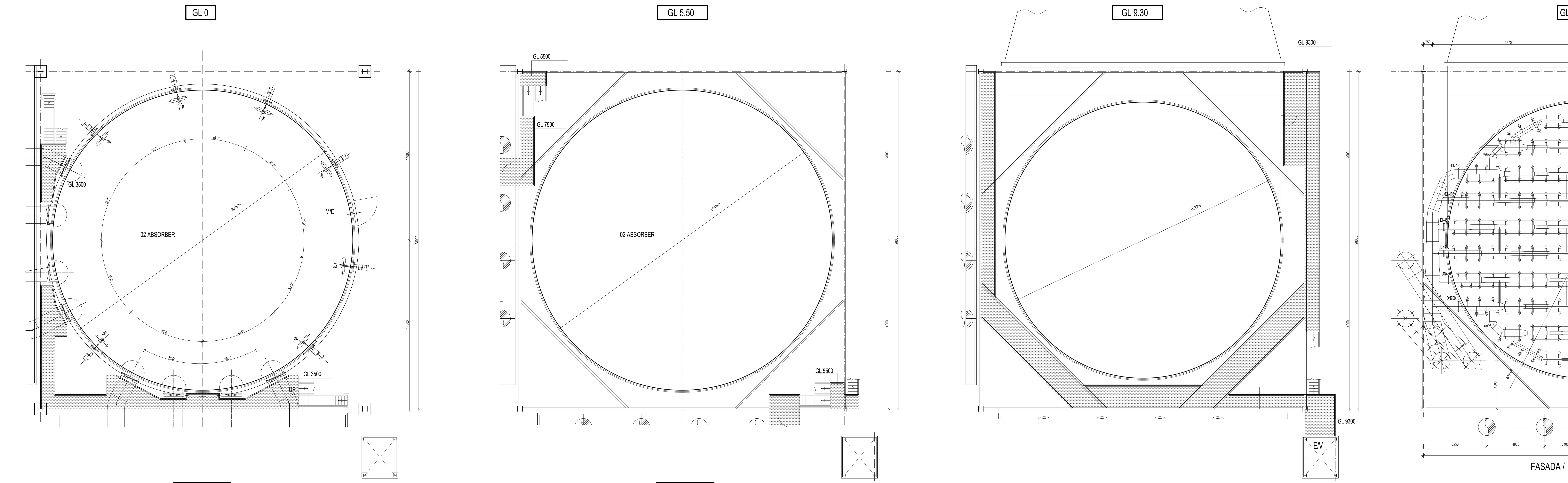

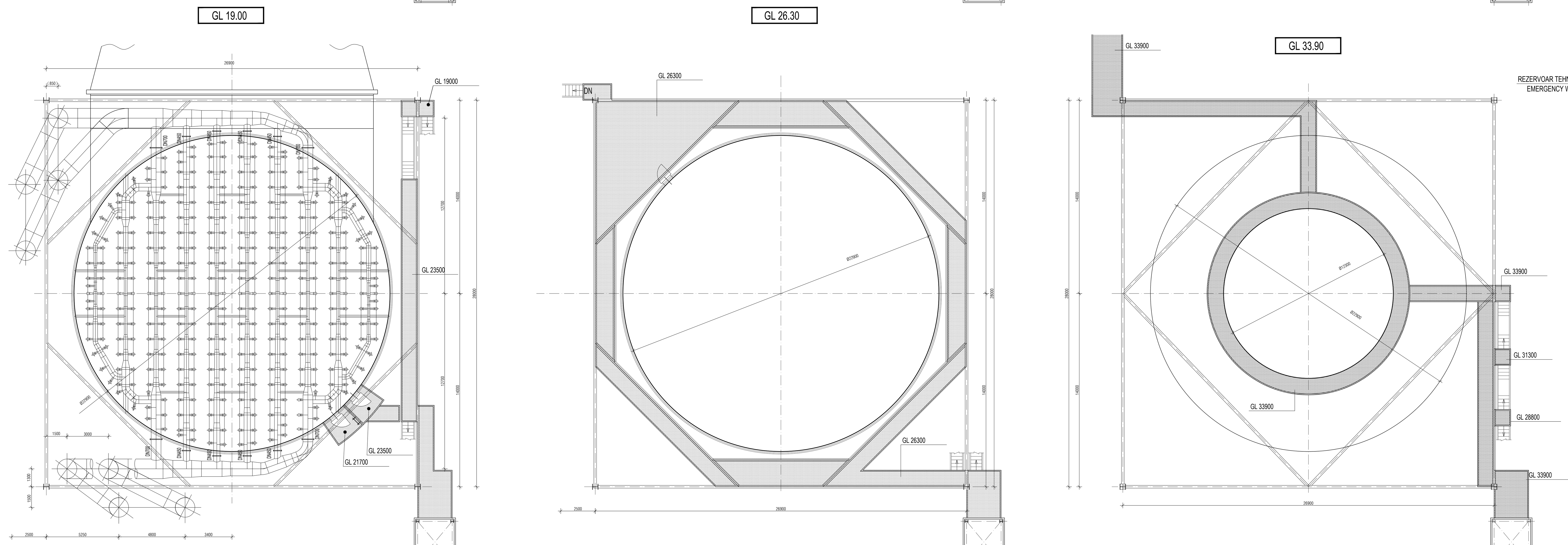

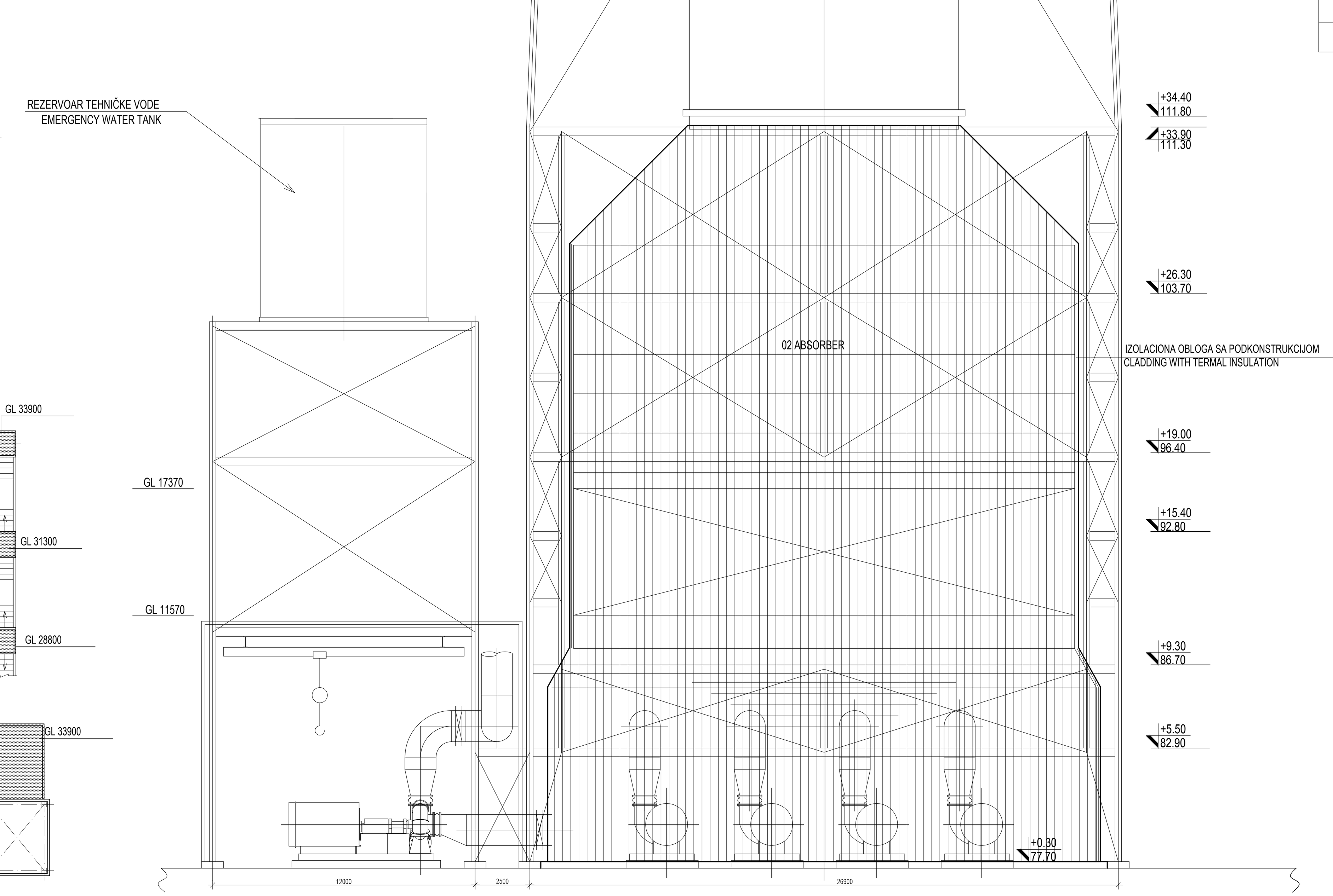

broj/No	NAMENA PROSTORIJA / ROOMS	površina / area (m²)	obim / perimeter (m')
OSNOVA ABSORBERA / ABSORBER PLAN			
ABSORBER C2 (A2) / ABSORBER C2 (A2)			
1	Platforma nivo 0.00 / Platform level 0.00	52.16	82.79
2	Platforma nivo +5.50 / Platform level +5.50	10.76	15.00
3	Platforma nivo +9.30 / Platform level +9.30	151.69	174.27
4	Platforma nivo +15.40 / Platform level +15.40	28.44	48.65
5	Platforma nivo +19.00 / Platform level +19.00	53.81	84.68
6	Platforma nivo +26.30 / Platform level +26.30	179.08	203.77
7	Platforma nivo +33.90 / Platform level +33.90	115.51	189.01
8	Stepenice/Stairs	70.00	105.00
	UKUPNO / TOTAL:	661.45	
	BRUTO POVRŠINA PLATFORMI / BRUTO AREA PLATFORM:	661.45	
	BRUTO POVRŠINA TEMELJA / BRUTO AREA FOUNDATION:	831.00	
	BRGP / GBA:	1.422.45	

ИНЖЕЊЕРСКА КОМОРА СРБИЈЕ
Мирјана Б. Лазић
дипл.инж.арх.
300 4540 03
ОДГОВОРНИ ПРОЈЕКТАНТ

REV.	Opis revizije / Revision description	Datum/Date	Crtao/Drawn	Overio/Appr.
-				
-				
01				

Broj ugovora / Contract No :12.01.12625/52-17

Konzorcium: / Consortium: MITSUBISHI HITACHI POWER SYSTEMS; ITOCHU; MITSUBISHI HITACHI POWER SYSTEMS EUROPE; Jedinstvo

delta inženjering
www.deltainzenjering.rs

Odg. projektant: / Respon. designer:	Mirjana Lazić dipl.inž.arh.
Licenca odg.proj.: / Res. des. license:	300 4540 03
Vrsta teh. dok.: / Project type:	IDR - Idejno rešenje / IDR - Conceptual design
Datum: / Date:	25.01.2018.
Projekcija: / Projection:	
Deo projekta: / Project part:	Projekat arhitekture / Arhitectural Design
Investitor: / Client:	JP ELEKTROPRIVREDA SRBIJE / PE ELEKTROPRIVREDA SERBIA
Objekat: / Complex:	Postrojenje za ODG za TE Nikola Tesla A / FGD Construction Project for TPP Nikola Tesla
Postrojenje: / Facility:	Zona apsorbera / Absorbers area
Deo postrojenja: / Unit:	C2-02 APSORBER / C2-ABSORBER (2HTD)
Razmera: / Scale:	1/100
Naziv crteža: / Drawing name:	OSNOVA, PRESECI I FASADE / PLAN, CROSS SECTIONS, FACADES
Crtež broj: / Drawing number:	NTFGD-S2.2-IDR-1.0.0-C2-001D-rev00
List/od: / Page/of:	1/1
Rev.	00

Ime fajla / File name: NTFGD-S2.2-IDR-1.0.0-C2-001D-rev00.dwg

ZA.Q.01 - Rev. 3 - 15.05.15.

C3 - A1 - PUMPNA STANICA A1-1 / RECIRCULATION PUMP BUILDING 1

OSNOVA NA KOTI ±0.00 i ČELIČNA PLATFORMA NA KOTI +3.50 / GROUND FLOOR (+-0,00) & STEEL PLATFORM +3.50

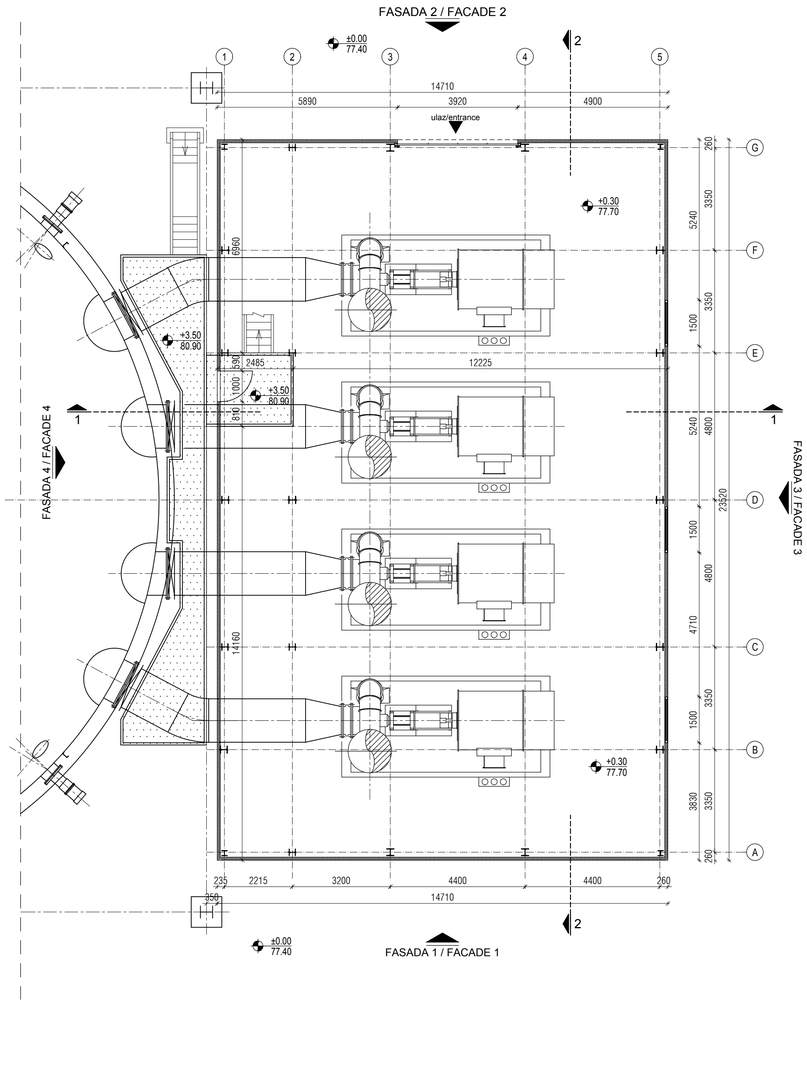

C3 - A1 - PUMPNA STANICA A1-1 / RECIRCULATION PUMP BUILDING 1

ČELIČNA PLATFORMA NA KOTI +7.50 / STEEL PLATFORM +7.50

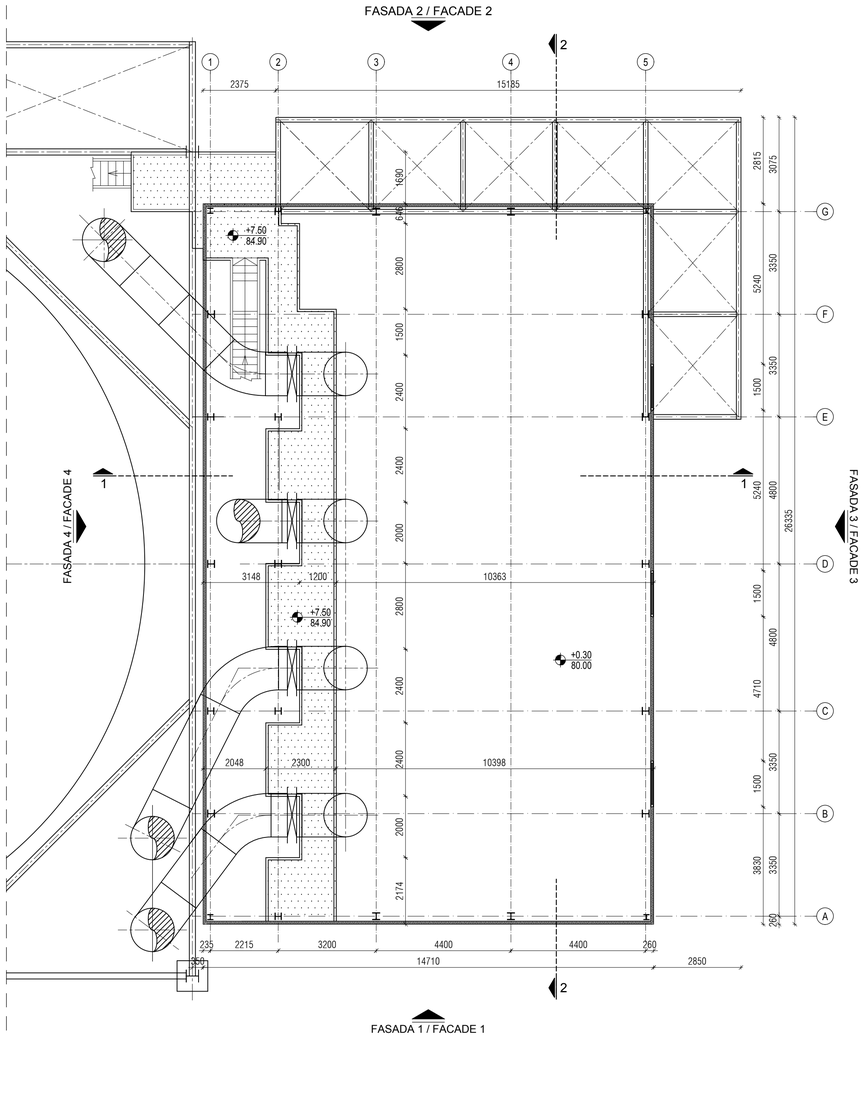

broj / No.	NAMENA PROSTORIJA / ROOMS	površina / area (m²)	obim / perimeter (m')
OSNOVA +0.00 /FLOOR PLAN +-0.00			
PUMPNA STANICA A1-1 / RECIRCULATION PUMP BUILDING 1			
0.1	PROSTOR ZA PUMPE SPACE FOR PUMPS	336.84	75.46
	UKUPNO / TOTAL:	336.84	
NETO POVRŠINA +-0.00 / NETO AREA +-0.00:		336.84	
BRUTO POVRŠINA +-0.00 / BRUTO AREA +-0.00:		345.98	76.26
BRGP / GBA:		405.01	
Površina horizontalne projekcije krova / Area horizontal projection of the roof		420.11	

LEGENDA MATERIJALA / LEGEND:

ARMIRANI BETON	REINFORCED CONCRETE
NABIJENI BETON	LEAN CONCRETE
MRŠAVI BETON /TAMPON/	LEAN CONCRETE
GITER BLOK	CLAY BLOCK
PUNA OPEKA	BRICK BLOCK
FASADNI I KROVNI PANEL	FACADES AND ROOF PANEL
MOTAŽNI PREGRADNI ZID OD GK PLOČA	PREFABRICATED WALL PANELS
TERMOIZOLACIJA	THERMAL INSOLATION
HIDROIZOLACIJA	HYDROISOLATION
ŠLJUNAK	GRAVEL
ČELIČNA KONSTRUKCIJA	STEEL CONSTRUCTION
OLUCI	CHAMFER
DROBLJENI KAMEN	GRAVEL
NABIJENA ZEMLJA	HUDDLE GROUND

broj / No.	NAMENA PROSTORIJA / ROOMS	površina / area (m²)	obim / perimeter (m')
OSNOVA PLATFORME +7.50 / PLATFORM +7.50			
PUMPNA STANICA A1-1 / RECIRCULATION PUMP BUILDING 1			
0.1	PLATFORME SPACE FOR PUMPS	60,59	57.28
	UKUPNO / TOTAL:	60,59	
NETO POVRŠINA +7.50 / NETO AREA +7.50:		60,59	
BRUTO POVRŠINA +7.50 / BRUTO AREA +7.50:		60,59	
BRGP / GBA:		405.01	
Površina horizontalne projekcije krova / Area horizontal projection of the roof		420.11	

REV.	Opis revizije / Revision description	Datum/Date	Crtao/Drawn	Overio/Appr.
1				
2				
3	Promena pečata crteža / Changed title block	25.01.2018.	L. Roglić, d.i.g.	

Broj ugovora / Contract No :12.01.12625/52-17

Konzorcijum: Consortium: MITSUBISHI HITACHI POWER SYSTEMS; STOCHO; MITSUBISHI HITACHI POWER SYSTEMS EUROPE; Jedinstvo

delta inženjering — www.deltainzenjering.rs

	Ime i prezime / Name	Potpis/Sign.
Odg. projektant: Respon. designer:	Mirjana Lazić dipl.inž.arh.	
Licenca odg.proj.: Res. des. license:	300 4540 03	

Vrsta teh. dok.: Project type: IDR - Idejno rešenje / IDR - Conceptual design

Datum: Date: 25.01.2018. Projekcija: Projection:

Deo projekta: Project part: Projekat arhitekture / Arhitectural Design

Investitor: Client: ELEKTROPRIVREDA SRBIJE — JP ELEKTROPRIVREDA SRBIJE / PE ELEKTROPRIVREDA SERBIA

Objekat: Complex: Postrojenje za ODG za TE Nikola Tesla A / FGD Construction Project for TPP Nikola Tesla

Postrojenje: Facility: Zona apsorbera / Absorbers area

Deo postrojenja: Unit: C3-1HTD-Zgrada recirkulacionih pumpi 1HTD-1 / C3-1HTD-Recirculation pump building 1

Razmera: Scale: 1/100

Naziv crteža: Drawing name: OSNOVE ETAŽA / FLOOR PLAN

Crtež broj: Drawing number: NTFGD-S2.1-IDR-1.0.0-C3-1HTD-001D-rev00

List/od: Page/of: 1/4

Rev. 3

Inženjerska komora Srbije — Mirjana Б. Лазић дипл.инж.арх. 300 4540 03

Ime fajla / File name: NTFGD-S2.1-IDR-1.0.0-C3-1HTD_rev00.dwg

ZK.G.01 - Rev. 3 - 15.05.15.

C3 - A1 - PUMPNA STANICA A1-1 / RECIRCULATION PUMP BUILDING 1

OSNOVA KROVNIH RAVNI / ROOF PLAN

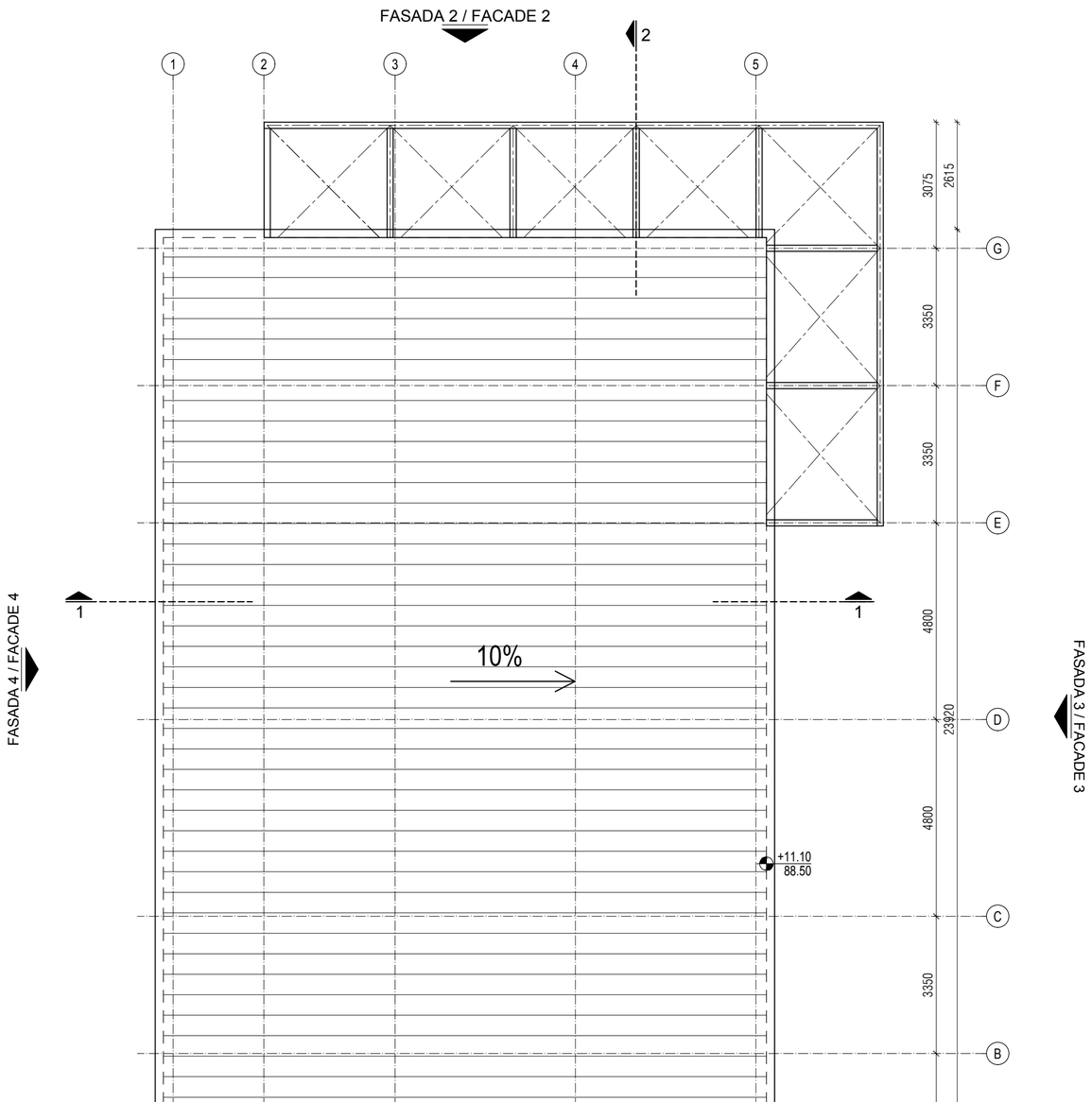

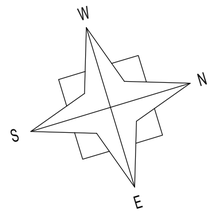

REV.	Opis revizije / Revision description	Datum/Date	Crtao/Drawn	Overio/Appr.
01	Promena pečata crteža / Changed title block	25.01.2018.	L. Rogljić, d.i.g.	

Broj ugovora / Contract No :12.01.12625/52-17

Konzorcium:
Consortium:

delta inženjering
www.deltainzenjering.rs

	Ime i prezime / Name	Potpis/Sign.
Odg. projektant: Respon. designer:	Mirjana Lazić dipl.inž.arh.	
Licenca odg.proj.: Res. des. license:	300 4540 03	

Vrsta teh. dok.: Project type: IDR - Idejno rešenje / IDR - Conceptual design

Datum: Date: 25.01.2018. Projekcija: Projection:

Deo projekta: Project part: Projekat arhitekture / Arhitectural Design

Investitor: Client: JP ELEKTROPRIVREDA SRBIJE / PE ELEKTROPRIVREDA SERBIA

Objekat: Complex: Postrojenje za ODG za TE Nikola Tesla A / FGD Construction Project for TPP Nikola Tesla

Postrojenje: Facility: Zona apsorbera / Absorbers area

Deo postrojenja: Unit: C3-1HTD-Zgrada recirkulacionih pumpi 1HTD-1 / C3-1HTD-Recirculation pump building 1

Razmera: Scale: 1/100

Naziv crteža: Drawing name: OSNOVA KROVA / ROOF PLAN

Crtež broj: Drawing number: NTFGD-S2.1-IDR-1.0.0-C3-1HTD-002D-rev00

List/od: Page/of: 2/4

Rev. 01

Inženjerska komora Srbije — Mirjana Б. Лазић, дипл.инж.арх. 300 4540 03 — Овлашћени инжењер

ZA G.01 - Rev. 3 - 15.05.15

Ime fajla / File name: NTFGD-S2.1-IDR-1.0.0-C3-1HTD_rev00.dwg

PRESEK 2-2 / CROSS SECTION 2-2

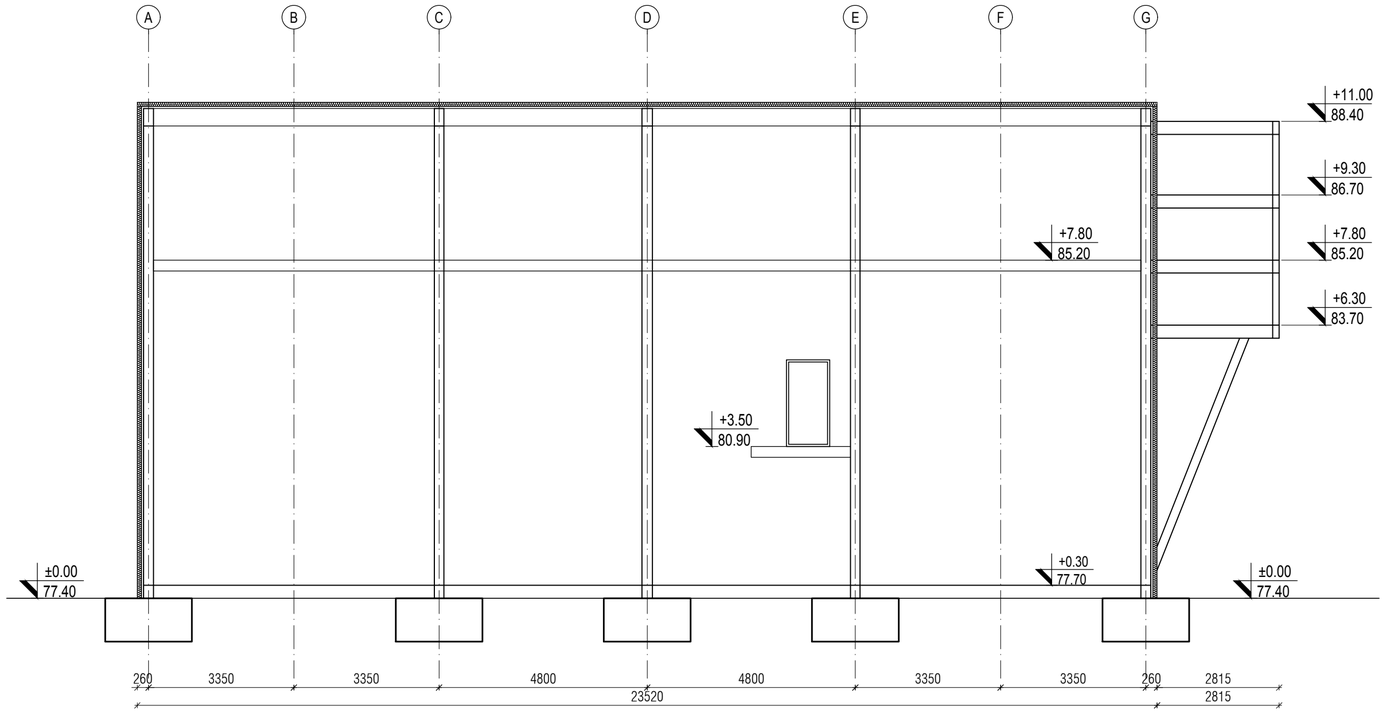

PRESEK 1-1 / CROSS SECTION 1-1

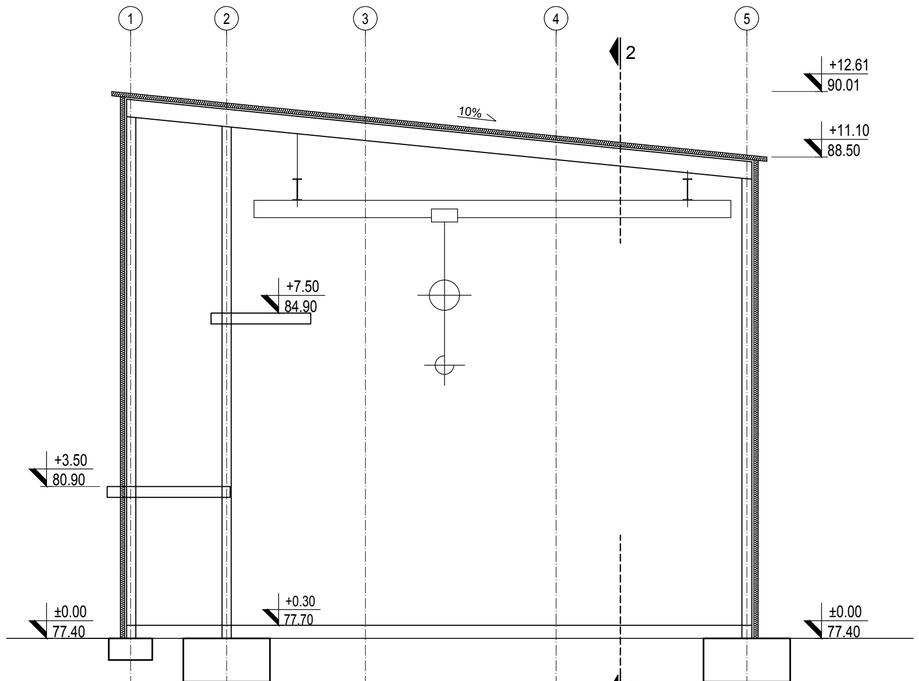

LEGENDA MATERIJALA / LEGEND:

ARMIRANI BETON	REINFORCED CONCRETE
NABIJENI BETON	LEAN CONCRETE
MRŠAVI BETON /TAMPON/	LEAN CONCRETE
GITER BLOK	CLAY BLOCK
PUNA OPEKA	BRICK BLOCK
FASADNI I KROVNI PANEL	FACADES AND ROOF PANEL
MOTAŽNI PREGRADNI ZID OD GK PLOČA	PREFABRICATED WALL PANELS
TERMOIZOLACIJA	THERMAL INSOLATION
HIDROIZOLACIJA	HYDROISOLATION
ŠLJUNAK	GRAVEL
ČELIČNA KONSTRUKCIJA	STEEL CONSTRUCTION
OLUCI	CHAMFER
DROBLJENI KAMEN	GRAVEL
NABIJENA ZEMLJA	HUDDLE GROUND

REV.	Opis revizije / Revision description	Datum/Date	Crtao/Drawn	Overio/Appr.
01	Promena pečata crteža / Changed title block	25.01.2018.	L. Rogljić, d.i.g.	

Broj ugovora / Contract No :12.01.12625/52-17

Konzorcium:
Consortium:

delta inženjering
www.deltainzenjering.rs

	Ime i prezime / Name	Potpis/Sign.
Odg. projektant: Respon. designer:	Mirjana Lazić dipl.inž.arh.	
Licence odg.proj.: Res. des. license:	300 4540 03	
Vrsta teh. dok.: Project type:	IDR - Idejno rešenje IDR - Conceptual design	
Datum: Date:	25.01.2018.	Projekcija: Projection:
Deo projekta: Project part:	Projekat arhitekture Arhitectural Design	

Investitor: Client: JP ELEKTROPRIVREDA SRBIJE / PE ELEKTROPRIVREDA SERBIA

Objekat: Complex: Postrojenje za ODG za TE Nikola Tesla A / FGD Construction Project for TPP Nikola Tesla

Postrojenje: Facility: Zona apsorbera / Absorbers area

Deo postrojenja: Unit: C3-1HTD-Zgrada recirkulacionih pumpi 1HTD-1 / C3-1HTD-Recirculation pump building 1

Razmera: Scale: 1/100

Naziv crteža: Drawing name: POPREČNI PRESECI / CROSS SECTIONS

Crtež broj: Drawing number: NTFGD-S2.1-IDR-1.0.0-C3-1HTD-003D-rev00

List/od: Page/of: 3/4

Rev. 01

Ime fajla / File name: NTFGD-S2.1-IDR-1.0.0-C3-1HTD_rev00.dwg

ZA Q.01 - Rev. 3 - 15.05.15.

C3 - A1 - PUMPNA STANICA A1-1 / RECIRCULATION PUMP BUILDING 1

FASADA 1 / FACADE 1

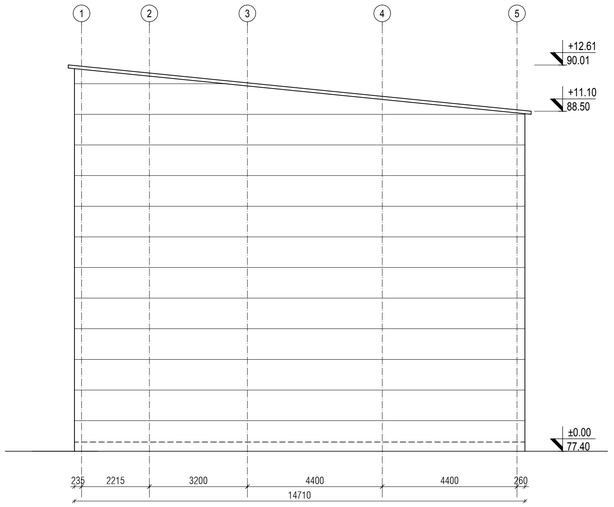

FASADA 3 / FACADE 3

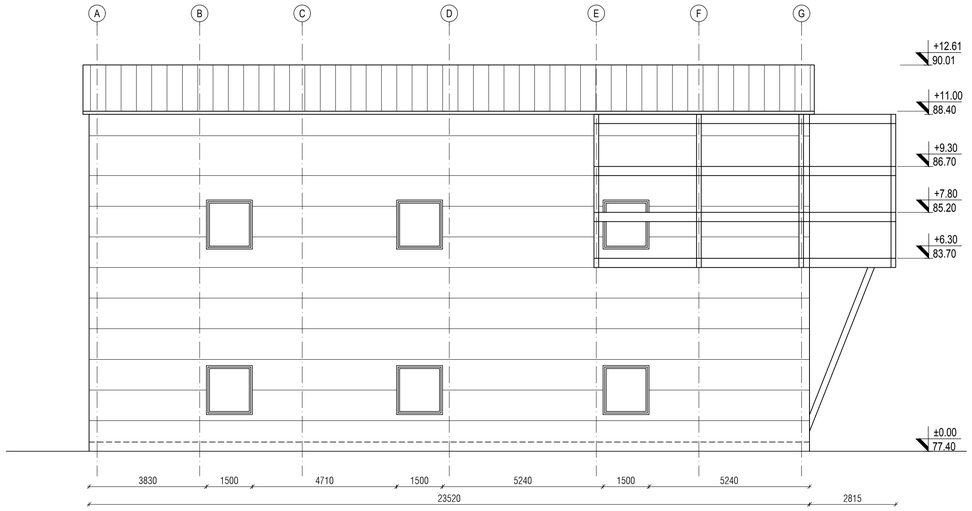

FASADA 2 / FACADE 2

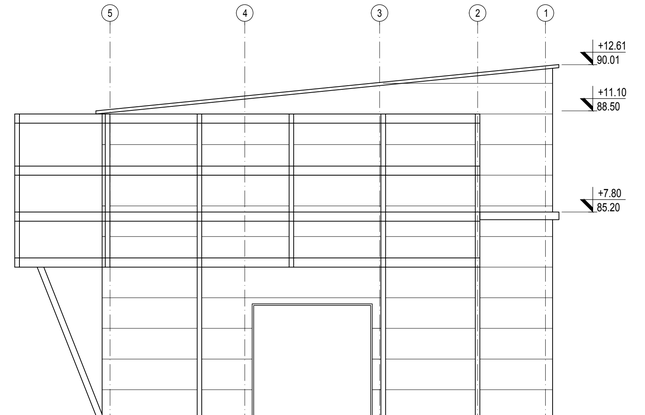

FASADA 4 / FACADE 4

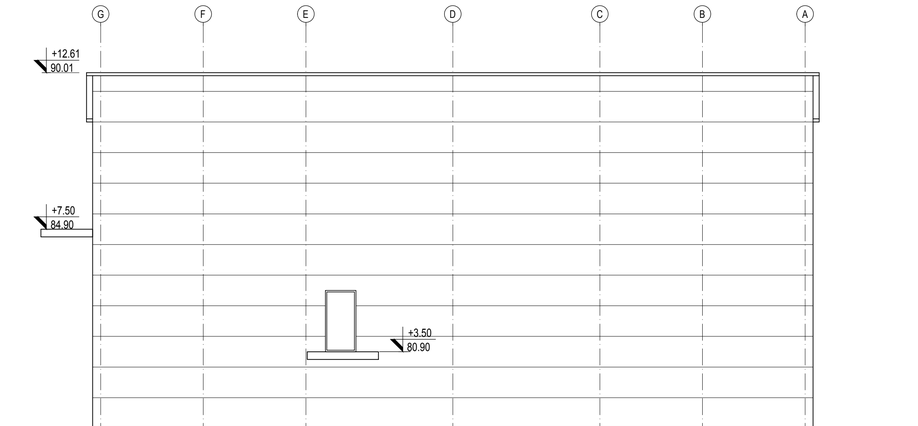

REV.	Opis revizije / Revision description	Datum/Date	Crtao/Drawn	Overio/Appr.
1	Promena pečata crteža / Changed title block	25.01.2018.	L. Rogljić, d.i.g.	

Broj ugovora / Contract No :12.01.12625/52-17

Konzorcijum:
Consortium:

delta inženjering
www.deltainzenjering.rs

	Ime i prezime / Name	Potpis/Sign.
Odg. projektant: Respon. designer:	Mirjana Lazić dipl.inž.arh.	
Licenca odg.proj.: Res. des. license:	300 4540 03	

Vrsta tehn. dok.: Project type: IDR - Idejno rešenje / IDR - Conceptual design

Datum: Date: 25.01.2018. Projekcija: Projection:

Deo projekta: Project part: Projekat arhitekture / Arhitectural Design

Investitor: Client: JP ELEKTROPRIVREDA SRBIJE / PE ELEKTROPRIVREDA SERBIA

Objekat: Complex: Postrojenje za ODG za TE Nikola Tesla A / FGD Construction Project for TPP Nikola Tesla

Postrojenje: Facility: Zona apsorbera / Absorbers area

Deo postrojenja: Unit: C3-1HTD-Zgrada recirkulacionih pumpi 1HTD-1 / C3-1HTD-Recirculation pump building 1

Razmera: Scale: 1/100

Naziv crteža: Drawing name: FASADE / FACADES

Crtež broj: Drawing number: NTFGD-S2.1-IDR-1.0.0-C3-1HTD-004D-rev00

List/lod: Page/of: 4/4

Rev. 1

Mirjana Lazić, dipl.inž.arh., 300 4540 03

Ime fajla / File name: NTFGD-S2.1-IDR-1.0.0-C3-1HTD_rev00.dwg

DK-GF - Rev. 3 - 15.05.15.

FLOOR PLAN ±0.00, +3.50

OSNOVA NA KOTI ±0.00 i ČELIČNA PLATFORMA NA KOTI +3.50

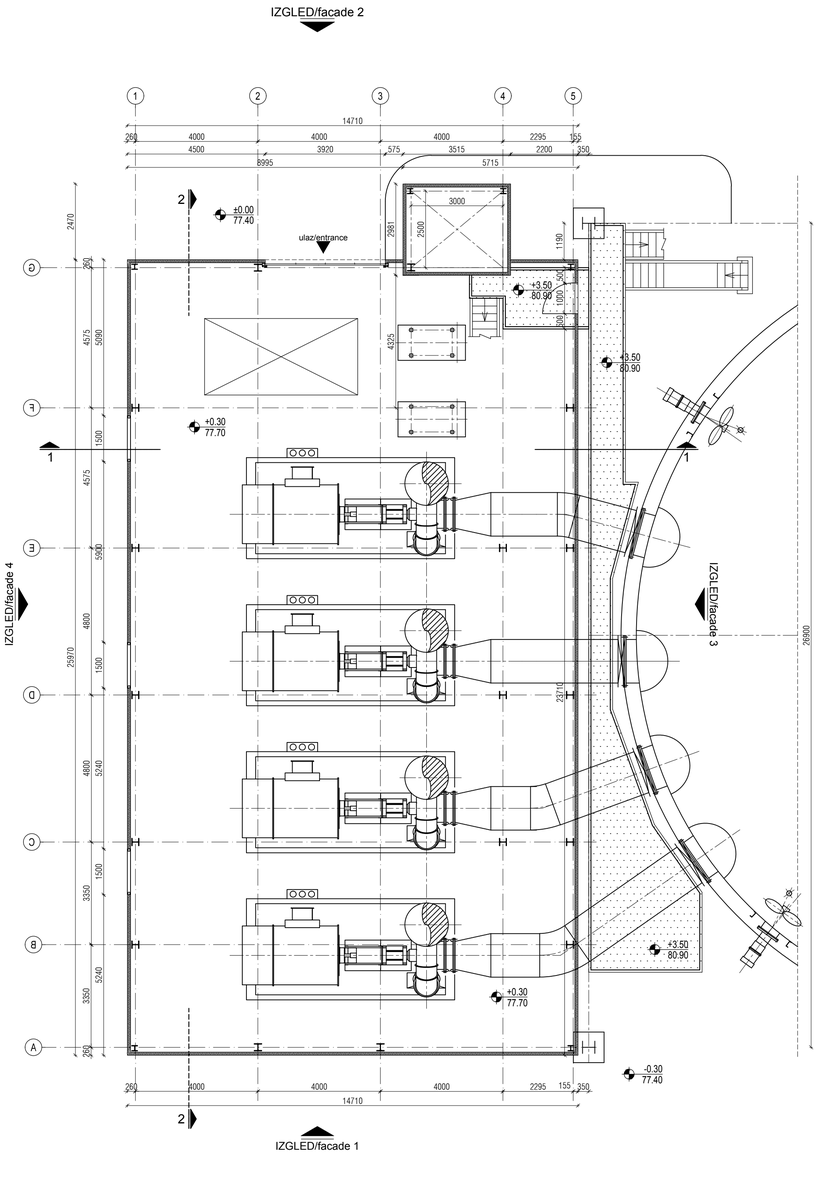

FLOOR PLAN +7.50

ČELIČNA PLATFORMA NA KOTI +7.50

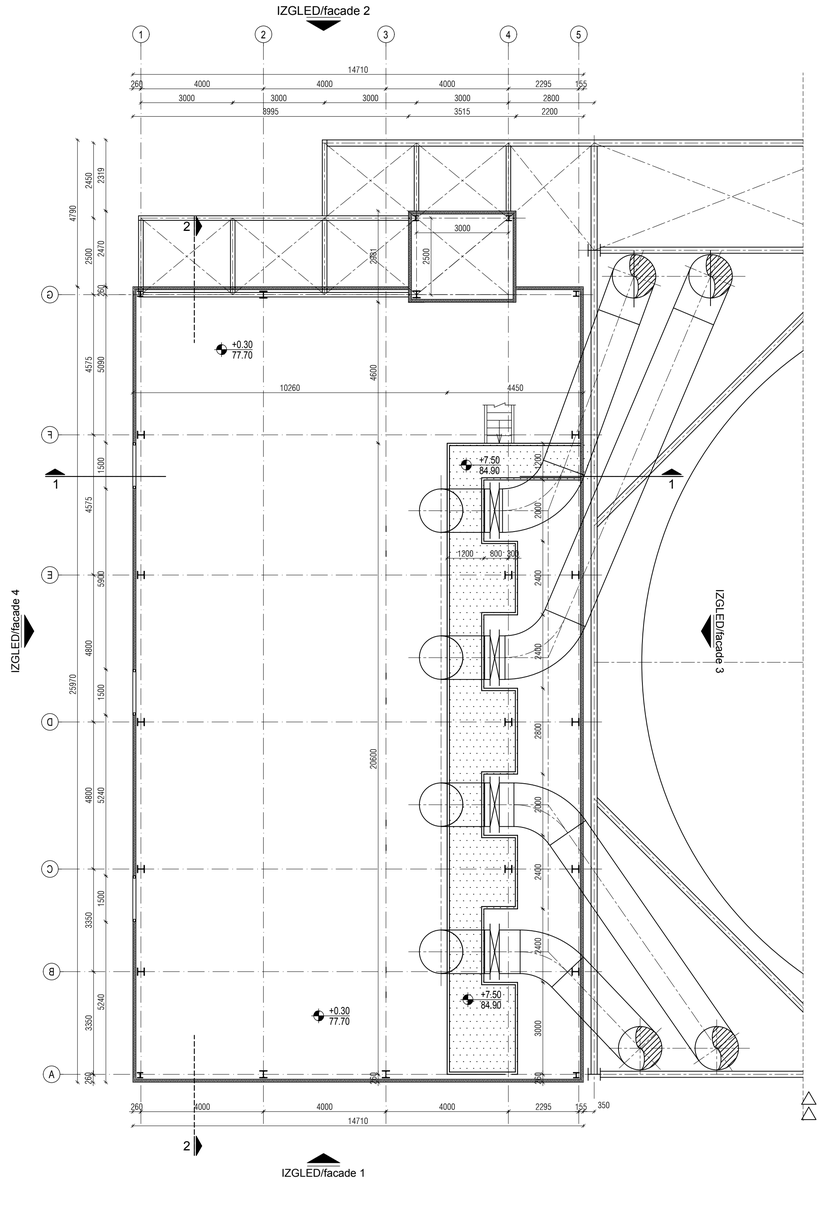

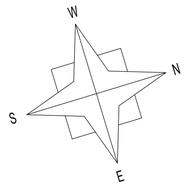

LEGENDA MATERIJALA / LEGEND:

ARMIRANI BETON	REINFORCED CONCRETE
NABIJENI BETON	LEAN CONCRETE
MRŠAVI BETON /TAMPON/	LEAN CONCRETE
GITER BLOK	CLAY BLOCK
PUNA OPEKA	BRICK BLOCK
FASADNI I KROVNI PANEL	FACADES AND ROOF PANEL
MOTAŽNI PREGRADNI ZID OD GK PLOČA	PREFABRICATED WALL PANELS
TERMOIZOLACIJA	THERMAL INSOLATION
HIDROIZOLACIJA	HYDROISOLATION
ŠLJUNAK	GRAVEL
ČELIČNA KONSTRUKCIJA	STEEL CONSTRUCTION
OLUCI	CHAMFIER
DROBLJENI KAMEN	GRAVEL
NABIJENA ZEMLJA	HUDDLE GROUND

broj / No.	NAMENA PROSTORIJA / ROOMS	površina / area (m²)	obim / perimeter (m')
OSNOVA +0.00 /FLOOR PLAN +-0.00			
PUMPNA STANICA A1-1 / RECIRCULATION PUMP BUILDING 1			
0.1	PROSTOR ZA PUMPE SPACE FOR PUMPS	373.93	75.46
	UKUPNO / TOTAL:	373.93	
	NETO POVRŠINA +-0.00 / NETO AREA +-0.00:	373.93	
	BRUTO POVRŠINA +-0.00 / BRUTO AREA +-0.00:	382.02	81.36
	BRGP / GBA:	430.05	
	Površina horizontalne projekcije krova / Area horizontal projection of the roof	398.45	

broj / No.	NAMENA PROSTORIJA / ROOMS	površina / area (m²)	obim / perimeter (m')
OSNOVA PLATFORME +7.50 / PLATFORM +7.50			
PUMPNA STANICA A1-1 / RECIRCULATION PUMP BUILDING 1			
0.1	PROSTOR ZA PUMPE SPACE FOR PUMPS	48,03	45.80
	UKUPNO / TOTAL:	48,03	
	NETO POVRŠINA +7.50 / NETO AREA +7.50:	48,03	
	BRUTO POVRŠINA +7.50 / BRUTO AREA +7.50:	48,03	
	BRGP / GBA:	430.05	
	Površina horizontalne projekcije krova / Area horizontal projection of the roof	398.45	

REV.	Opis revizije / Revision description	Datum/Date	Crtao/Drawn	Overio/Appr.
01	Promena pečata crteža / Changed title block	25.01.2018.	L. Rogić, d.i.g.	

Broj ugovora / Contract No :12.01.12625/52-17

Konzorcium: Consortium: MITSUBISHI HITACHI POWER SYSTEMS; STOCHI; MITSUBISHI HITACHI POWER SYSTEMS EUROPE; jedinstvo

delta inženjering — www.deltainzenjering.rs

Ime i prezime / Name | Potpis/Sign.

Odg. projektant: Respon. designer: Mirjana Lazić dipl.inž.arh.

Licenca odg.proj.: Res. des. license: 300 4540 03

Vrsta teh. dok.: Project type: IDR - Idejno rešenje / IDR - Conceptual design

Datum: Date: 25.01.2018. | Projekcija: Projection:

Deo projekta: Project part: Projekat arhitekture / Architectural Design

Investitor: Client: JP ELEKTROPRIVREDA SRBIJE / PE ELEKTROPRIVREDA SERBIA

Objekat: Complex: Postrojenje za ODG za TE Nikola Tesla A / FGD Construction Project for TPP Nikola Tesla

Postrojenje: Facility: Zona apsorbera / Absorbers area

Deo postrojenja: Unit: C4-1HTD-Zgrada recirkulacionih pumpi 1HTD-2 / C4-1HTD-Recirculation pump building 2

Razmera: Scale: 1/100

Naziv crteža: Drawing name: OSNOVE ETAŽA / FLOOR PLAN

Crtež broj: Drawing number: NTFGD-S2.1-IDR-1.0.0-C4-1HTD-001D-rev00

List/sol. Page/of: 1/4 Rev. 01

Ime fajla / File name: NTFGD-S2.1-IDR-1.0.0-C4-1HTD-rev00.dwg

DKGP- Rev 2 - 10.08.15

OSNOVA KROVNIH RAVNI / ROOF PLAN

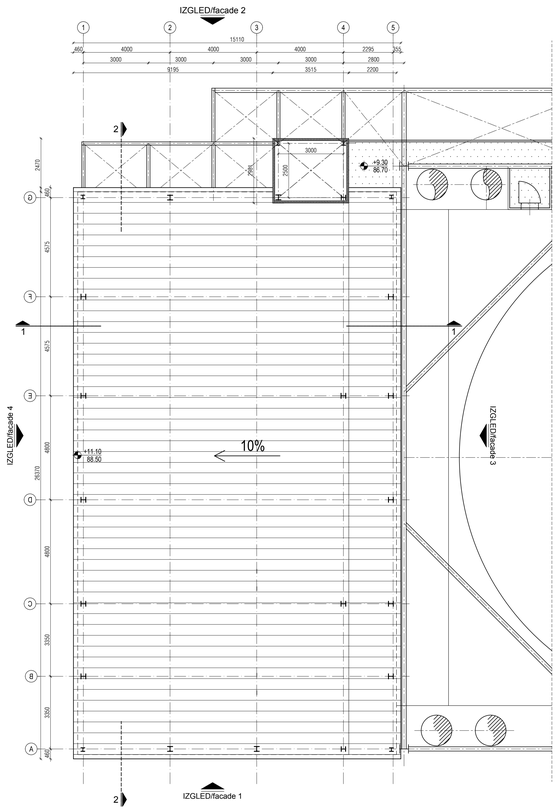

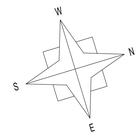

LEGENDA MATERIJALA / LEGEND:

ARMIRANI BETON	REINFORCED CONCRETE
NABIJENI BETON	LEAN CONCRETE
MRŠAVI BETON /TAMPON/	LEAN CONCRETE
GITER BLOK	CLAY BLOCK
PUNA OPEKA	BRICK BLOCK
FASADNI I KROVNI PANEL	FACADES AND ROOF PANEL
MONTAŽNI PREGRADNI ZID OD GK PLOČA	PREFABRICATED WALL PANELS
TERMOIZOLACIJA	THERMAL INSOLATION
HIDROIZOLACIJA	HYDROISOLATION
ŠLJUNAK	GRAVEL
ČELIČNA KONSTRUKCIJA	STEEL CONSTRUCTION
OLUCI	CHAMFER
DROBLJENI KAMEN	GRAVEL
NABIJENA ZEMLJA	HUDDLE GROUND

ČELIČNA PLATFORMA NA KOTI +25.00 I +26.30
STEEL PLATFORM +25.00 I +26.30

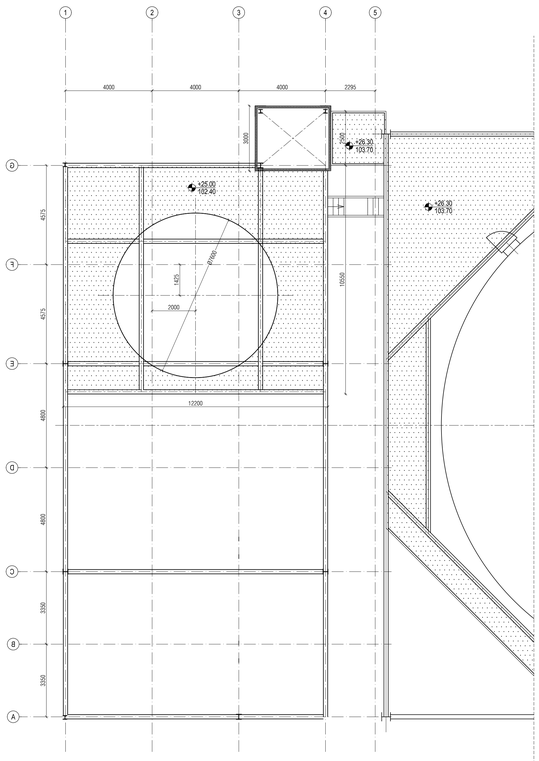

ČELIČNA PLATFORMA NA KOTI +33.90 i +35.35
STEEL PLATFORM +33.90 i +35.35

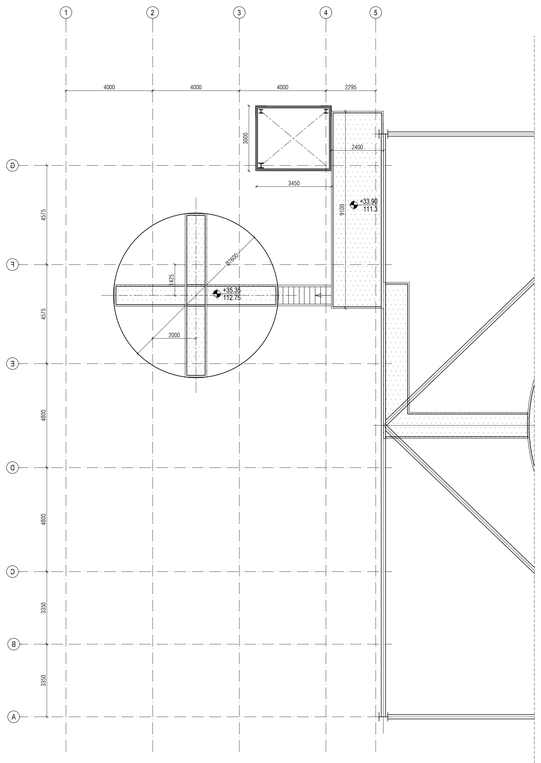

REV.	Opis revizije / Revision description	Datum/Date	Crtao/Drawn.	Overio/Appr.
1	Promena naziva crteža / Changed title block	25.01.2018.	L. Rogić, d.i.g.	

Broj ugovora / Contract No :12.01.12625/52-17

Konzorcijum: Consortium: MHI MITSUBISHI HITACHI POWER SYSTEMS; SOCHO; MHI MITSUBISHI HITACHI POWER SYSTEMS; Jedinstvo

delta inženjering
www.deltainzenjering.rs

	Ime i prezime / Name	Potpis/Sign.
Ovlš. projektant: Respon. designer:	Mirjana Lazić dipl.inž.arh.	
Licenca ovlš.prih.: Rec. des. licence:	300 4540 03	

Vrsta tehn. dok.: Project type: IDR - Idejno rešenje / IDR - Conceptual design

Datum: Date: 25.01.2018. Projekcija: Projection:

Deo projekta: Project part: Projekat arhitekture / Architectural Design

Investitor: Client: JP ELEKTROPRIVREDA SRBIJE / PE ELEKTROPRIVREDA SERBIA

Objekat: Complex: Postrojenje za ODG za TE Nikola Tesla A / FGD Construction Project for TPP Nikola Tesla

Prostorija: Facility: Zona apsorbera / Absorbers area

Deo postrojenja: Unit: C4-1HTD-Zgrada recirkulacionih pumpi 1HTD-2 / C4-1HTD-Recirculation pump building 2

Razmera: Scale: 1/100

Naziv crteža: Drawing name: OSNOVA KROVA / ROOF PLAN

Crtež broj: Drawing number: NTFGD-S2.1-IDR-1.0.0-C4-1HTD-002D-rev00

List: 2/4 Format: A1 Rev.: 1

Mirjana Lazić, dipl. inž. arh. 300 4540 03 Inženjerska komora Srbije

NTFGD-S2.1-IDR-1.0.0-C4-1HTD-002D-rev00.dwg

PRESEK 1-1 / CROSS-SECTION 1-1

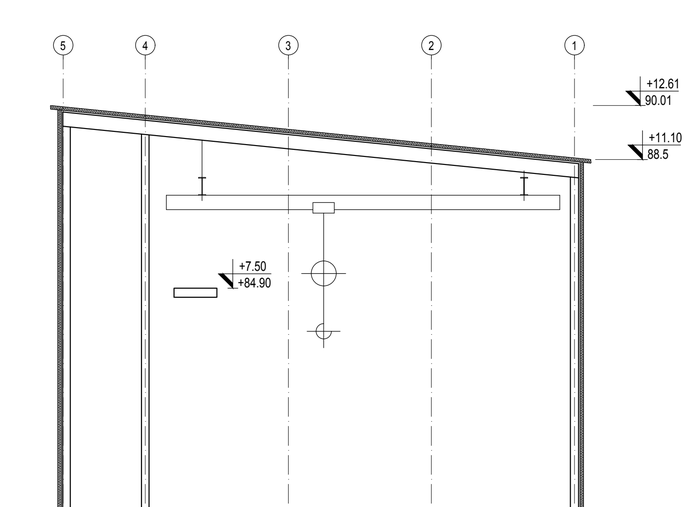

PRESEK 2-2 / CROSS SECTION 2-2

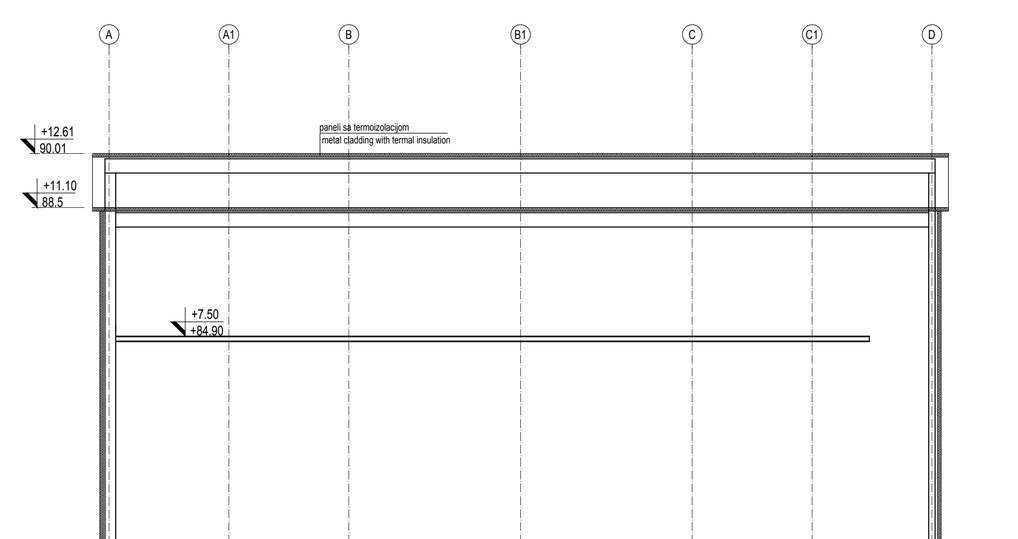

LEGENDA MATERIJALA / LEGEND:

ARMIRANI BETON	REINFORCED CONCRETE
NABIJENI BETON	LEAN CONCRETE
MRŠAVI BETON /TAMPON/	LEAN CONCRETE
GITER BLOK	CLAY BLOCK
PUNA OPEKA	BRICK BLOCK
FASADNI I KROVNI PANEL	FACADES AND ROOF PANEL
MOTAŽNI PREGRADNI ZID OD GK PLOČA	PREFABRICATED WALL PANELS
TERMOIZOLACIJA	THERMAL INSOLATION
HIDROIZOLACIJA	HYDROISOLATION
ŠLJUNAK	GRAVEL
ČELIČNA KONSTRUKCIJA	STEEL CONSTRUCTION
OLUCI	CHAMFER
DROBLJENI KAMEN	GRAVEL
NABIJENA ZEMLJA	HUDDLE GROUND

REV.	Opis revizije / Revision description	Datum/Date	Crtao/Drawn	Overio/Appr.
01.	Promena pečata crteža / Changed title block	25.01.2018.	L. Roglić, d.i.g.	

Broj ugovora / Contract No :12.01.12625/52-17

Konzorcium:
Consortium:

MITSUBISHI HITACHI POWER SYSTEMS · ITOCHU · MITSUBISHI HITACHI POWER SYSTEMS EUROPE · Jedinstvo

delta inženjering
www.deltainzenjering.rs

	Ime i prezime / Name	Potpis/Sign.
Odg. projektant: Respon. designer:	Mirjana Lazić dipl.inž.arh.	
Licenca odg.proj.: Res. des. license:	300 4540 03	

Vrsta teh. dok.: Project type: IDR - Idejno rešenje / IDR - Conceptual design
Datum: Date: 25.01.2018.
Projekcija: Projection:
Deo projekta: Project part: Projekat arhitekture / Arhitectural Design

Investitor: Client: JP ELEKTROPRIVREDA SRBIJE / PE ELEKTROPRIVREDA SERBIA
Objekat: Complex: Postrojenje za ODG za TE Nikola Tesla A / FGD Construction Project for TPP Nikola Tesla
Postrojenje: Facility: Zona apsorbera / Absorbers area
Deo postrojenja: Unit: C4-1HTD-Zgrada recirkulacionih pumpi 1HTD-2 / C4-1HTD-Recirculation pump building 2

Razmera: Scale: 1/100
Naziv crteža: Drawing name: PRESECI / CROSS SECTIONS
Crtež broj: Drawing number: NTFGD-S2.1-IDR-1.0.0-C4-1HTD-003D-rev00
List/od: Page/of: 3/4
Rev. 01

Ime fajla / File name: NTFGD-S2.1-IDR-1.0.0-C4-1HTD-rev00.dwg

24.G.01 - Rev. 3 - 18.06.15

FASADA 1
FACADE 1

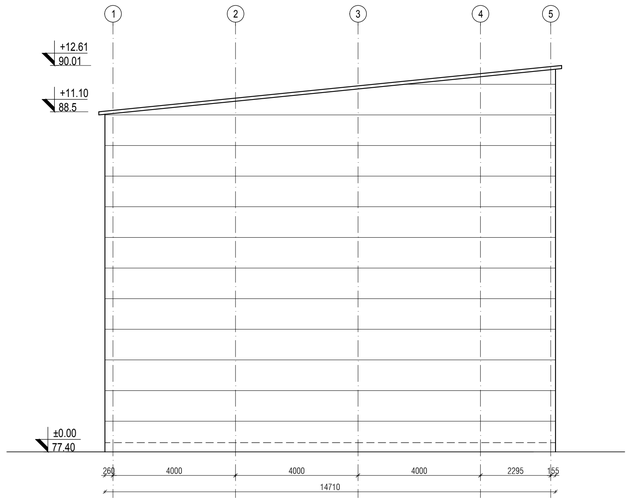

FASADA 3
FACADE 3

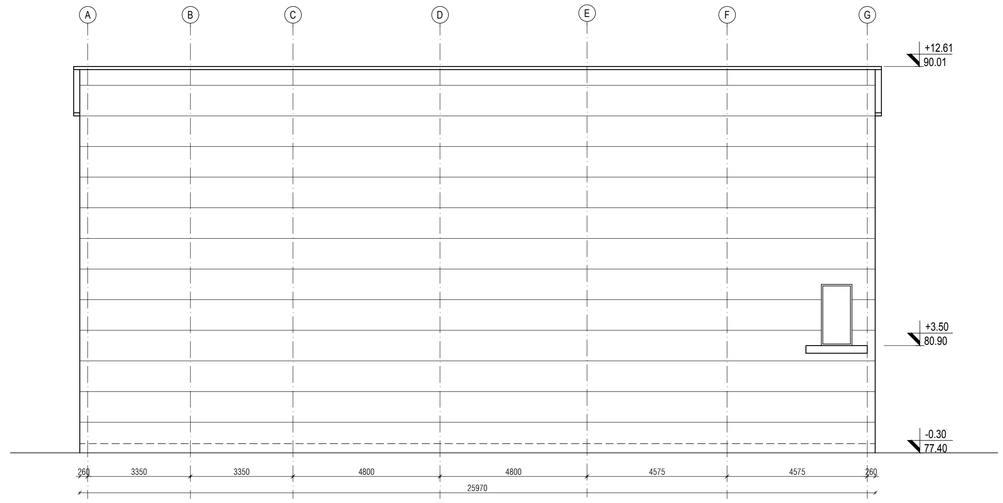

FASADA 2
FACADE 2

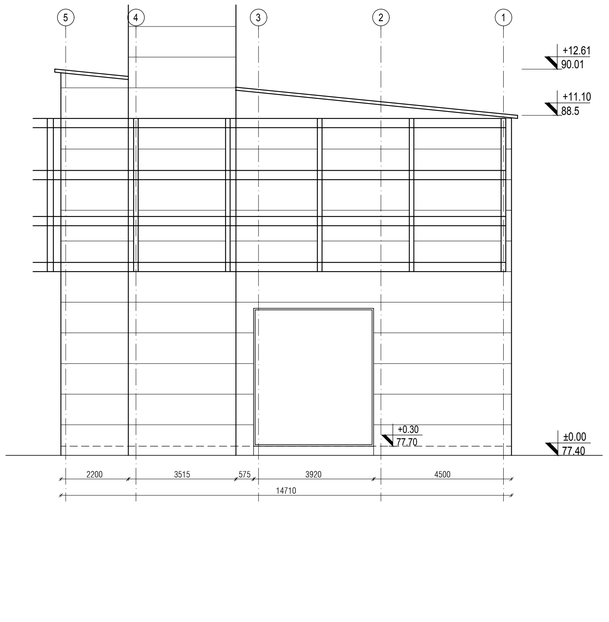

FASADA 4
FACADE 4

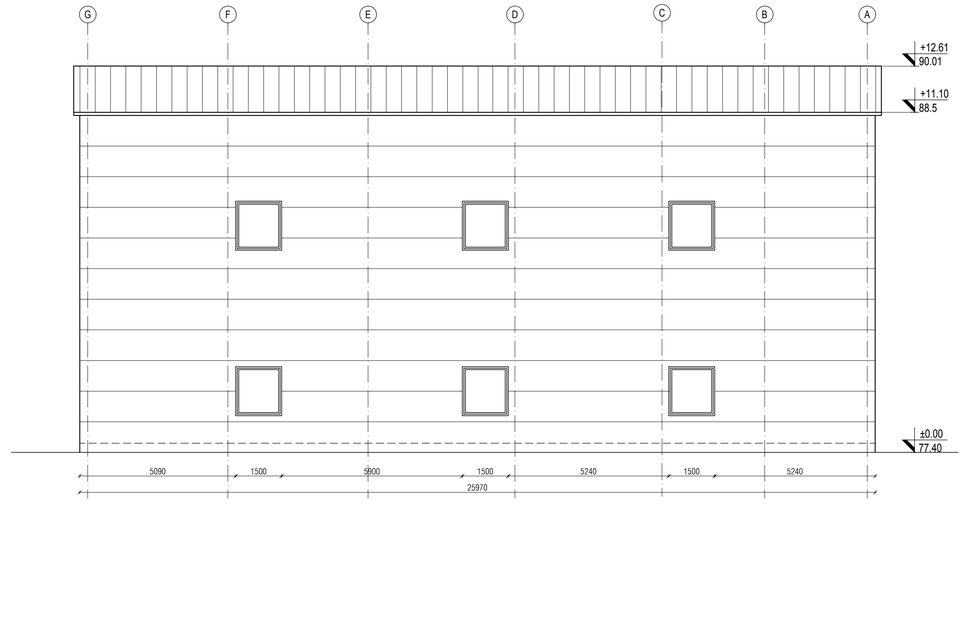

Мирјана Б. Лазић дипл.инж.арх. 300 4540 03

REV.	Opis revizije / Revision description	Datum/Date	Crtao/Drawn	Overio/Appr.
01	Promena pečata crteža / Changed title block	25.01.2018.	L. Rogljić, d.i.g.	

Broj ugovora / Contract No :12.01.12625/52-17

Konzorcijum:
Consortium:

delta inženjering
www.deltainzenjering.rs

	Ime i prezime / Name	Potpis/Sign.
Odg. projektant: Respon. designer:	Mirjana Lazić dipl.inž.arh.	
Licenca odg.proj.: Res. des. license:	300 4540 03	
Vrsta teh. dok.: Project type:	IDR - Idejno rešenje IDR - Conceptual design	
Datum: Date:	25.01.2018.	Projekcija: Projection:
Deo projekta: Project part:	Projekat arhitekture Arhitectural Design	

Investitor: Client: JP ELEKTROPRIVREDA SRBIJE
PE ELEKTROPRIVREDA SERBIA

Objekat: Complex: Postrojenje za ODG za TE Nikola Tesla A
FGD Construction Project for TPP Nikola Tesla

Postrojenje: Facility: Zona apsorbera
Absorbers area

Deo postrojenja: Unit: C4-1HTD-Zgrada recirkulacionih pumpi 1HTD-2
C4-1HTD-Recirculation pump building 2

Razmera: Scale:	Naziv crteža: Drawing name:	Crtež broj: Drawing number:	List/od: Page/of:
1/100	FASADE FACADES	NTFGD-S2.1-IDR-1.0.0-C4-1HTD-004D-rev00	4/4

Rev. 01

Ime fajla / File name: NTFGD-S2.1-IDR-1.0.0-C4-1HTD-rev00.dwg

ZA.G.R - Rev. 3 / 15.05.15

C3-2HTD - PUMPNA STANICA A2-1 / RECIRCULATION PUMP BUILDING 1

OSNOVA PRIZEMLJA A (+-0,00m) / GROUND FLOOR PLAN A (+-0,00m)

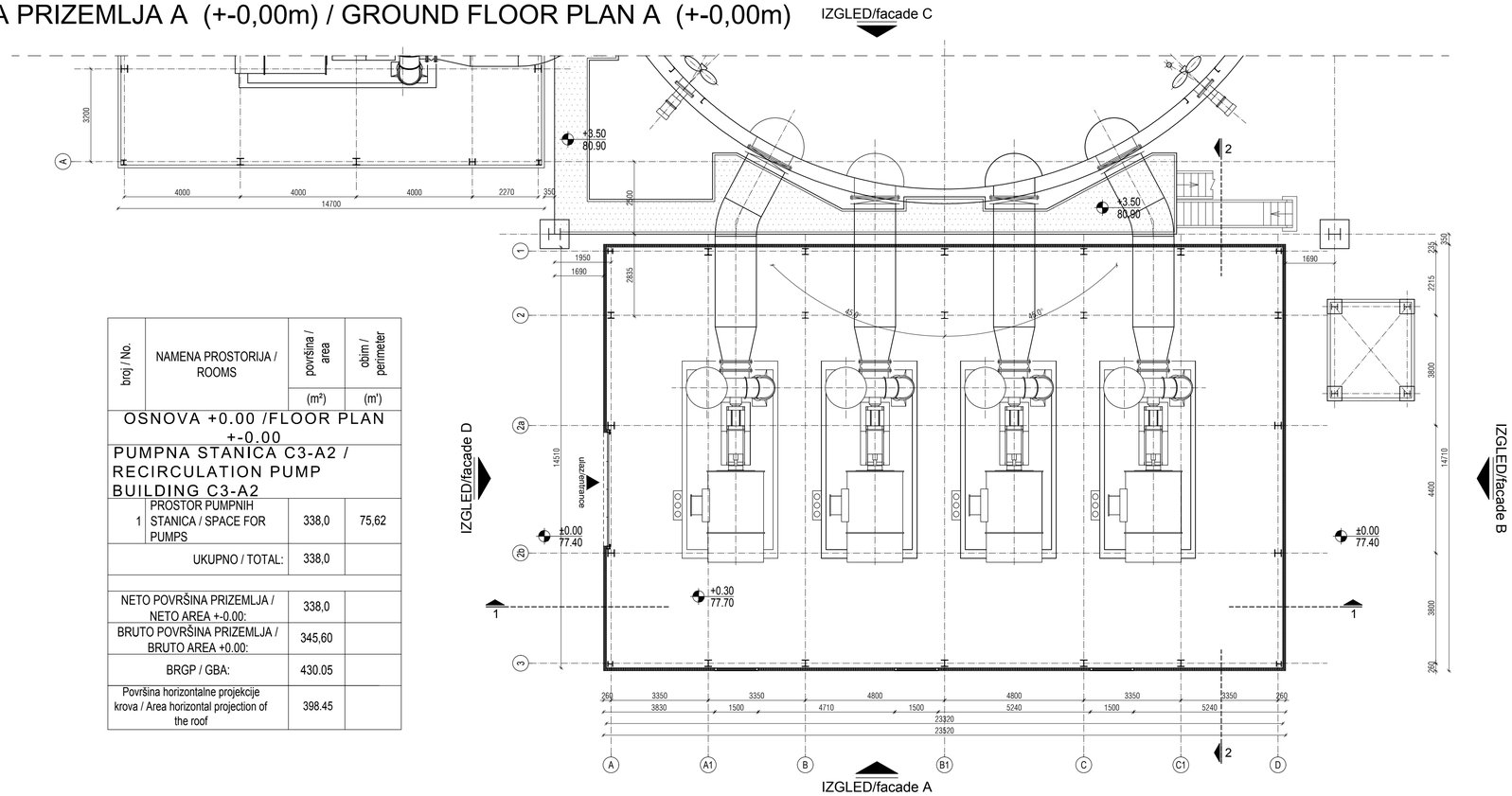

broj / No.	NAMENA PROSTORIJA / ROOMS	površina / area (m²)	obim / perimeter (m')
OSNOVA +0.00 /FLOOR PLAN +-0.00			
PUMPNA STANICA C3-A2 / RECIRCULATION PUMP BUILDING C3-A2			
1	PROSTOR PUMPNIH STANICA / SPACE FOR PUMPS	338,0	75,62
	UKUPNO / TOTAL:	338,0	
	NETO POVRŠINA PRIZEMLJA / NETO AREA +-0.00:	338,0	
	BRUTO POVRŠINA PRIZEMLJA / BRUTO AREA +0.00:	345,60	
	BRGP / GBA:	430.05	
	Površina horizontalne projekcije krova / Area horizontal projection of the roof	398.45	

OSNOVA B (+7,50m) / FLOOR PLAN B (+7,50m)

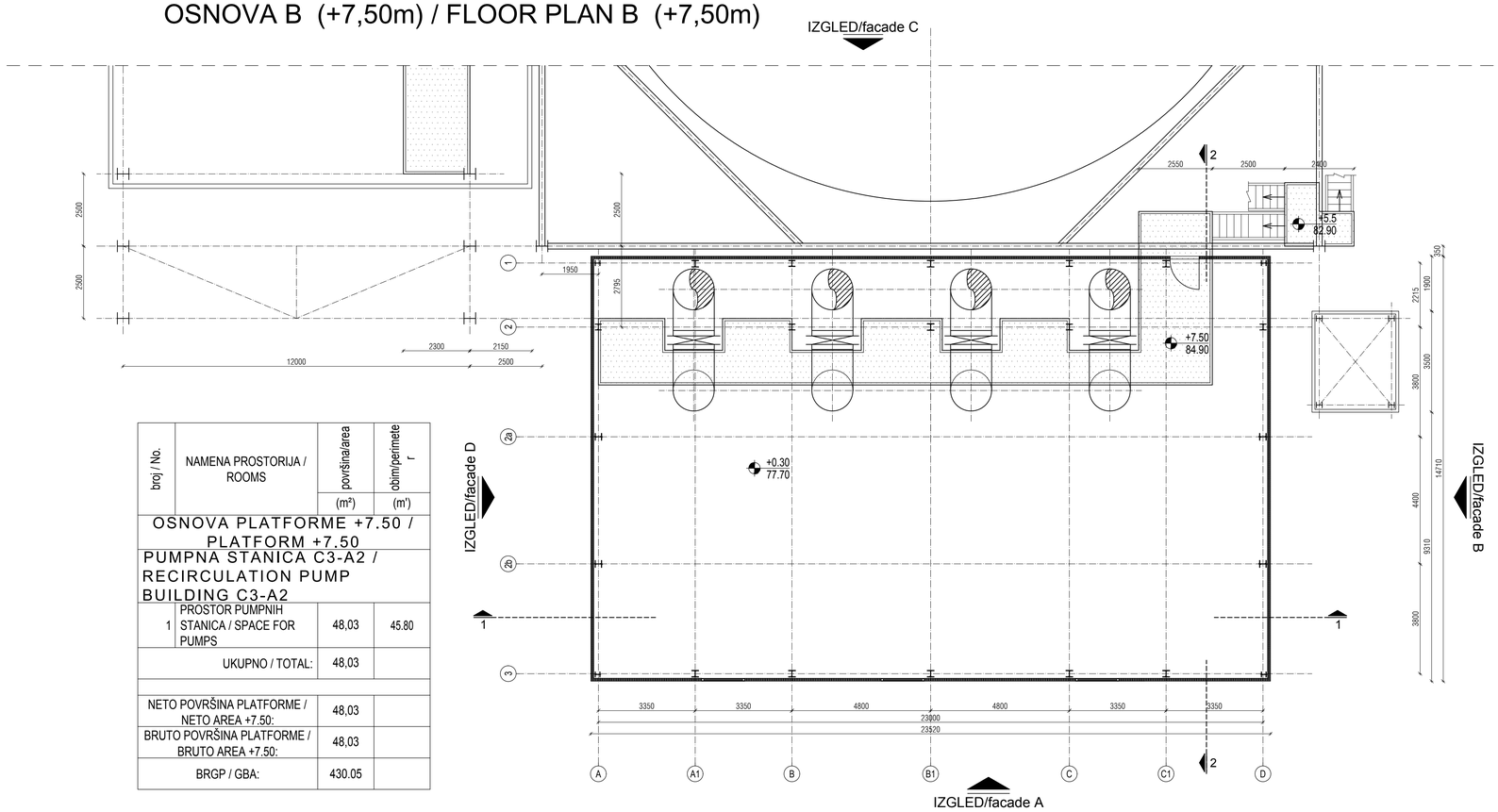

broj / No.	NAMENA PROSTORIJA / ROOMS	površina/area (m²)	obim/perimeter (m')
OSNOVA PLATFORME +7.50 / PLATFORM +7.50			
PUMPNA STANICA C3-A2 / RECIRCULATION PUMP BUILDING C3-A2			
1	PROSTOR PUMPNIH STANICA / SPACE FOR PUMPS	48,03	45.80
	UKUPNO / TOTAL:	48,03	
	NETO POVRŠINA PLATFORME / NETO AREA +7.50:	48,03	
	BRUTO POVRŠINA PLATFORME / BRUTO AREA +7.50:	48,03	
	BRGP / GBA:	430.05	

LEGENDA MATERIJALA / LEGEND:

ARMIRANI BETON	REINFORCED CONCRETE
NABIJENI BETON	LEAN CONCRETE
MRŠAVI BETON /TAMPON/	LEAN CONCRETE
GITER BLOK	CLAY BLOCK
PUNA OPEKA	BRICK BLOCK
FASADNI I KROVNI PANEL	FACADES AND ROOF PANEL
MOTAŽNI PREGRADNI ZID OD GK PLOČA	PREFABRICATED WALL PANELS
TERMOIZOLACIJA	THERMAL INSOLATION
HIDROIZOLACIJA	HYDROISOLATION
ŠLJUNAK	GRAVEL
ČELIČNA KONSTRUKCIJA	STEEL CONSTRUCTION
OLUCI	CHAMFER
DROBLJENI KAMEN	GRAVEL
NABIJENA ZEMLJA	HUDDLE GROUND

REV.	Opis revizije / Revision description	Datum/Date	Crtao/Drawn	Overio/Appr.
1	Promena pečata crteža / Changed title block	25.01.2018.	M. Žakula, d.i.a.	

Broj ugovora / Contract No :12.01.12625/52-17

Konzorcium: Consortium: MHI Mitsubishi Hitachi Power Systems; STOCHO; MHPS Mitsubishi Hitachi Power Systems Europe; Jedinstvo

delta inženjering
www.deltainzenjering.rs

	Ime i prezime / Name	Potpis/Sign.
Odg. projektant: Respon. designer:	Mirjana Lazić dipl.inž.arh.	
Licenca odg.proj.: Res. des. license:	300 4540 03	

Investitor: Client: JP ELEKTROPRIVREDA SRBIJE / PE ELEKTROPRIVREDA SERBIA

Objekat: Complex: Postrojenje za ODG za TE Nikola Tesla A / FGD Construction Project for TPP Nikola Tesla

Vrsta teh. dok.: Project type: IDR - Idejno rešenje / IDR - Conceptual design

Datum: Date: 25.01.2018. Projekcija: Projection:

Postrojenje: Facility: Zona apsorbera / Absorbers area

Deo projekta: Project part: Projekat arhitekture / Arhitectural Design

Deo postrojenja: Unit: C3-2HTD-Zgrada recirkulacionih pumpi 2HTD-1 / C3-2HTD-Recirculation pump building 1

Razmera: Scale: 1/100

Naziv crteža: Drawing name: OSNOVE ETAŽA / FLOOR PLAN

Crtež broj: Drawing number: NTFGD-S2.2-IDR-1.0.0-C3-2HTD-001D-rev00

List/od: Page/of: 1/4

Rev. 1

Mirjana Lazić dipl.inž.arh. 300 4540 03 Inženjerska komora Srbije

DA-0.01 - Rev. 3 - 15.05.16.

Ime fajla / File name: NTFGD-S2.2-IDR-1.0-C3-2HTD-osv00.dwg

C3-2HTD - PUMPNA STANICA A2-1 / RECIRCULATION PUMP BUILDING 1
OSNOVA KROVNE KONSTRUKCIJE I RAVNI RAVNI / ROOF PLAN

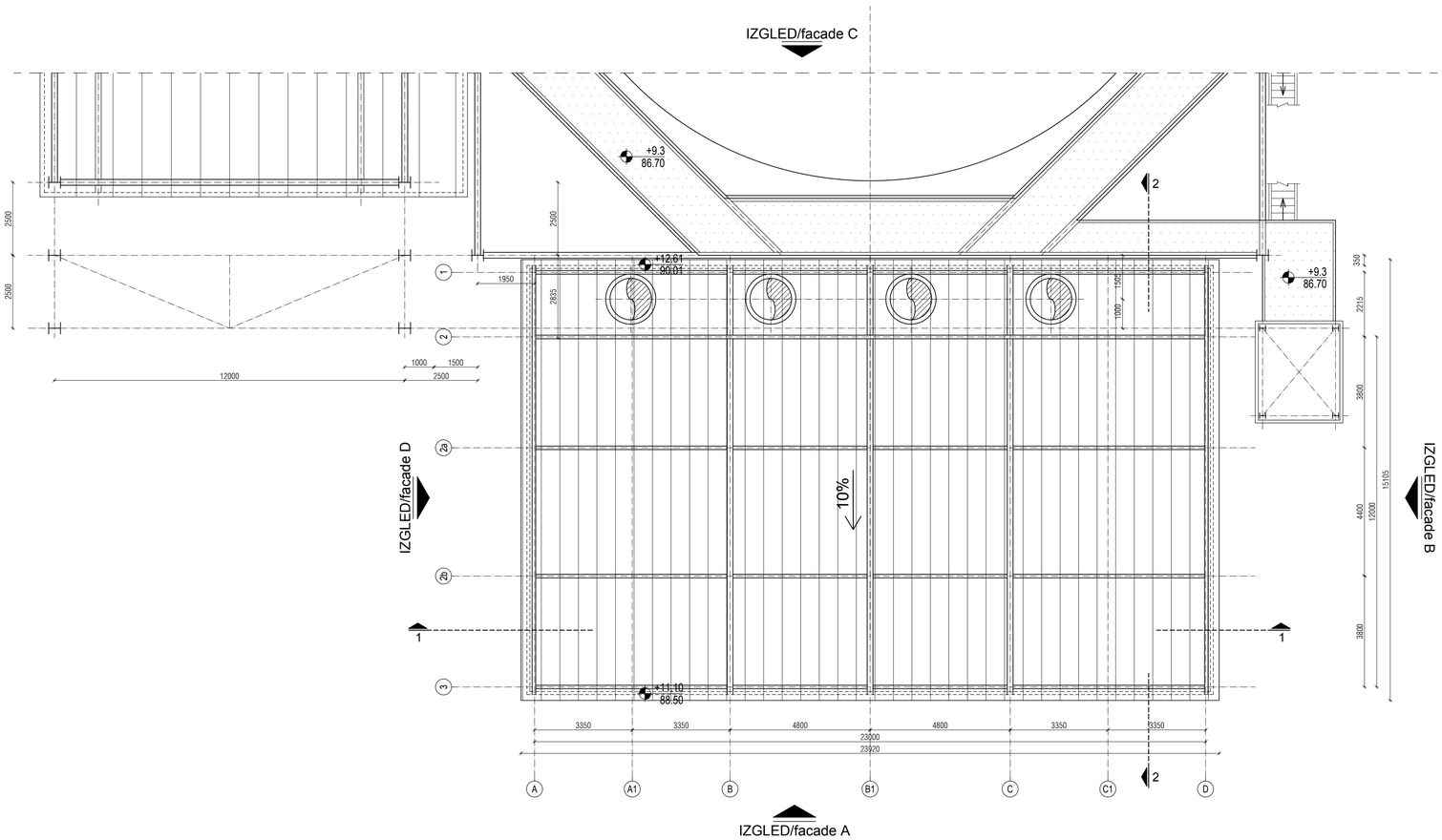

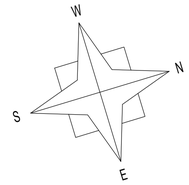

LEGENDA MATERIJALA / LEGEND:

ARMIRANI BETON	REINFORCED CONCRETE
NABIJENI BETON	LEAN CONCRETE
MRŠAVI BETON /TAMPON/	LEAN CONCRETE
GITER BLOK	CLAY BLOCK
PUNA OPEKA	BRICK BLOCK
FASADNI I KROVNI PANEL	FACADES AND ROOF PANEL
MOTAŽNI PREGRADNI ZID OD GK PLOČA	PREFABRICATED WALL PANELS
TERMOIZOLACIJA	THERMAL INSOLATION
HIDROIZOLACIJA	HYDROISOLATION
ŠLJUNAK	GRAVEL
ČELIČNA KONSTRUKCIJA	STEEL CONSTRUCTION
OLUCI	CHAMFER
DROBLJENI KAMEN	GRAVEL
NABIJENA ZEMLJA	HUDDLE GROUND

REV.	Opis revizije / Revision description	Datum/Date	Crtao/Drawn	Overio/Appr.
1	Promena pečata crteža / Changed title block	25.01.2018.	M. Žakula, d.i.a.	

Broj ugovora / Contract No :12.01.12625/52-17

Konzorcijum: Consortium:

delta inženjering
www.deltainzenjering.rs

	Ime i prezime / Name	Paraf/Sign.
Odg. projektant: Respon. designer:	Mirjana Lazić dipl.inž.arh.	
Licenca odg.proj.: Res. des. license:	300 4540 03	
Vrsta teh. dok.: Project type:	IDR - Idejno rešenje / IDR - Conceptual design	
Datum: Date:	25.01.2018.	Projekcija: Projection:
Deo projekta: Project part:	Projekat arhitekture / Arhitectural Design	

Investitor: Client: JP ELEKTROPRIVREDA SRBIJE / PE ELEKTROPRIVREDA SERBIA

Objekat: Complex: Postrojenje za ODG za TE Nikola Tesla A / FGD Construction Project for TPP Nikola Tesla

Postrojenje: Facility: Zona apsorbera / Absorbers area

Deo postrojenja: Unit: C3-2HTD-Zgrada recirkulacionih pumpi 2HTD-1 / C3-2HTD-Recirculation pump building 1

Razmera: Scale: 1/100

Naziv crteža: Drawing name: OSNOVA KROVA / ROOF PLAN

Crtež broj: Drawing number: NTFGD-S2.2-IDR-1.0.0-C3-2HTD-002D-rev00

List/od: Page/of: 2/4

Rev. 1

Mirjana Б. Лазић дипл.инж.арх. 300 4540 03

Ime fajla / File name: NTFGD-S2.2-IDR-1.0.0-C3-2HTD-rev00.dwg

24.0.01 - Rev. 2 - 15.06.15

C3-2HTD - PUMPNA STANICA A2-1 / RECIRCULATION PUMP BUILDING 1

PRESEK 2-2 / CROSS SECTION 2-2

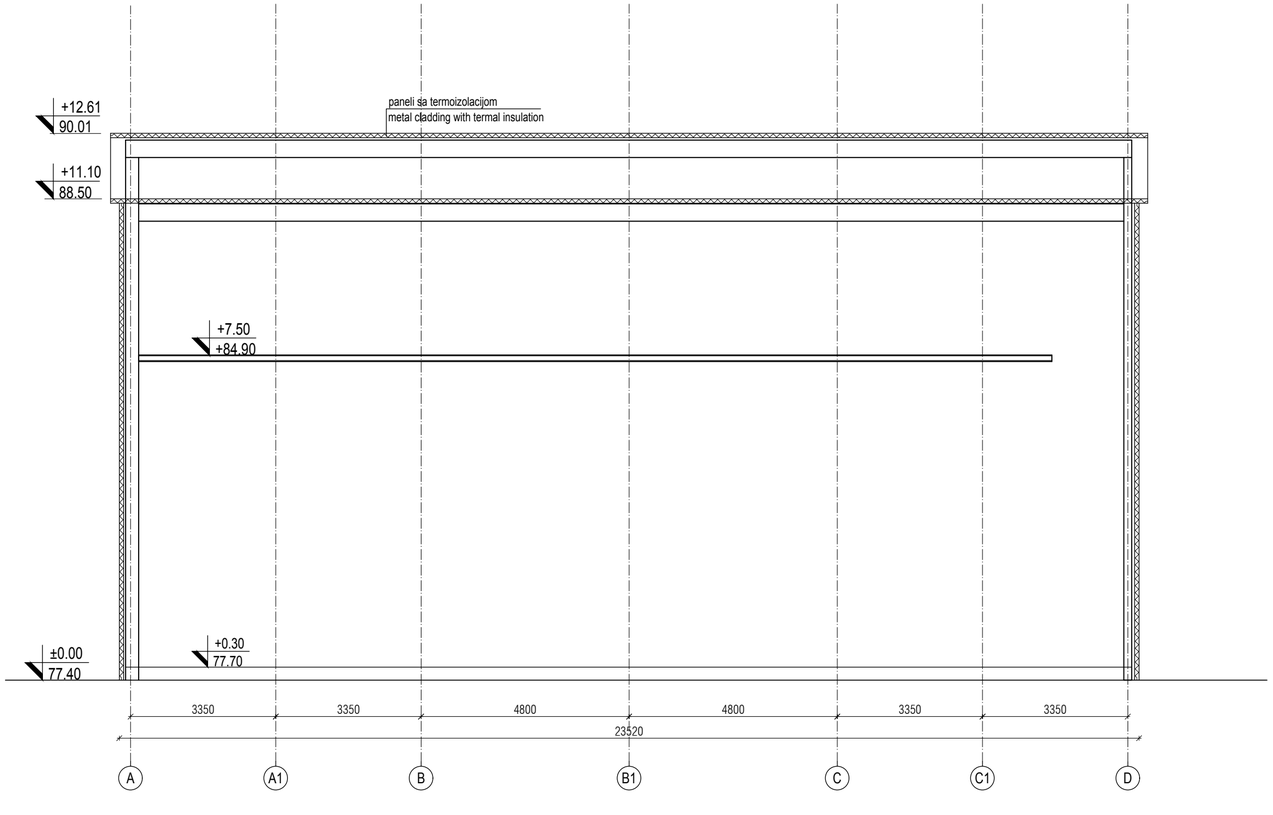

PRESEK 1-1 / CROSS SECTION 1-1

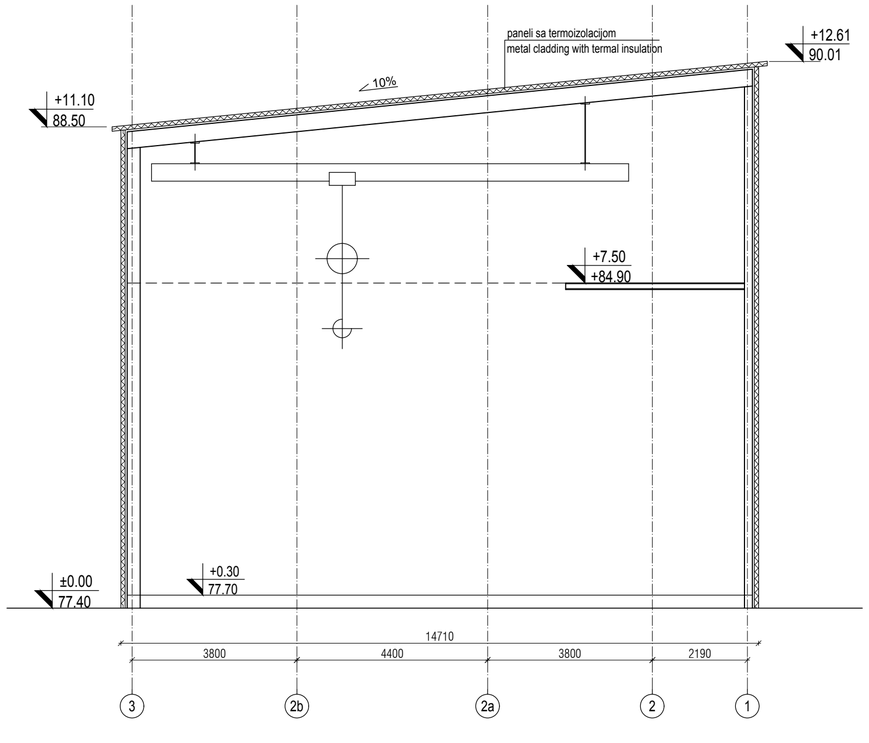

LEGENDA MATERIJALA / LEGEND:

ARMIRANI BETON	REINFORCED CONCRETE
NABIJENI BETON	LEAN CONCRETE
MRŠAVI BETON /TAMPON/	LEAN CONCRETE
GITER BLOK	CLAY BLOCK
PUNA OPEKA	BRICK BLOCK
FASADNI I KROVNI PANEL	FACADES AND ROOF PANEL
MOTAŽNI PREGRADNI ZID OD GK PLOČA	PREFABRICATED WALL PANELS
TERMOIZOLACIJA	THERMAL INSOLATION
HIDROIZOLACIJA	HYDROISOLATION
ŠLJUNAK	GRAVEL
ČELIČNA KONSTRUKCIJA	STEEL CONSTRUCTION
OLUCI	CHAMFER
DROBLJENI KAMEN	GRAVEL
NABIJENA ZEMLJA	HUDDLE GROUND

REV.	Opis revizije / Revision description	Datum/Date	Crtao/Drawn	Overio/Appr.
01	Promena pečata crteža / Changed title block	25.01.2018.	M. Žakula, d.i.a.	

Инжењерска комора Србије
Мирјана Б. Лазић
дипл.инж.арх.
300 4540 03
Овлашћени пројектант

Broj ugovora / Contract No :12.01.12625/52-17

Konzorcium:
Consortium:

MITSUBISHI HITACHI POWER SYSTEMS | ITOCHU | MITSUBISHI HITACHI POWER SYSTEMS EUROPE | Jedinstvo

delta inženjering
www.deltainzenjering.rs

	Ime i prezime / Name	Potpis/Sign.
Odg. projektant: Respon. designer:	Mirjana Lazić dipl.inž.arh.	
Licenca odg.proj.: Res. des. license:	300 4540 03	

Vrsta teh. dok.: Project type: IDR - Idejno rešenje / IDR - Conceptual design

Datum: Date: 25.01.2018. Projekcija: Projection:

Deo projekta: Project part: Projekat arhitekture / Arhitectural Design

Investitor: Client: JP ELEKTROPRIVREDA SRBIJE / PE ELEKTROPRIVREDA SERBIA

Objekat: Complex: Postrojenje za ODG za TE Nikola Tesla A / FGD Construction Project for TPP Nikola Tesla

Postrojenje: Facility: Zona apsorbera / Absorbers area

Deo postrojenja: Unit: C3-2HTD-Zgrada recirkulacionih pumpi 2HTD-1 / C3-2HTD-Recirculation pump building 1

Razmera: Scale: 1/100

Naziv crteža: Drawing name: PRESECI / CROSS SECTIONS

Crtež broj: Drawing number: NTFGD-S2.2-IDR-1.0.0-C3-2HTD-003D-rev00

List/od: Page/of: 3/4

Rev. 01

Ime fajla / File name: NTFGD-S2.2-IDR-1.0.0-C3-2HTD-rev00.dwg

ZA Q-01 - Rev. 3 - 15.05.18

C3-2HTD - PUMPNA STANICA A2-1 / RECIRCULATION PUMP BUILDING 1

FASADA A / FACADE A

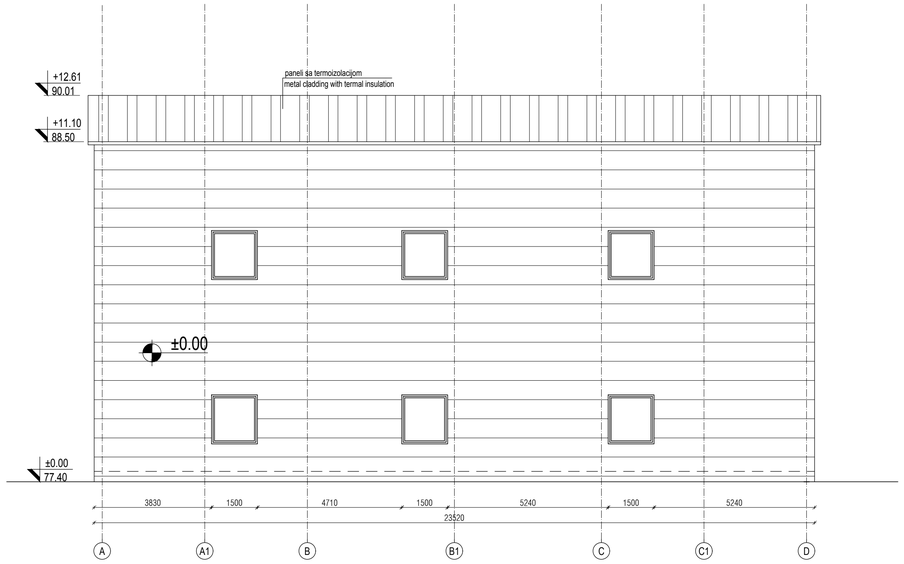

FASADA B / FACADE B

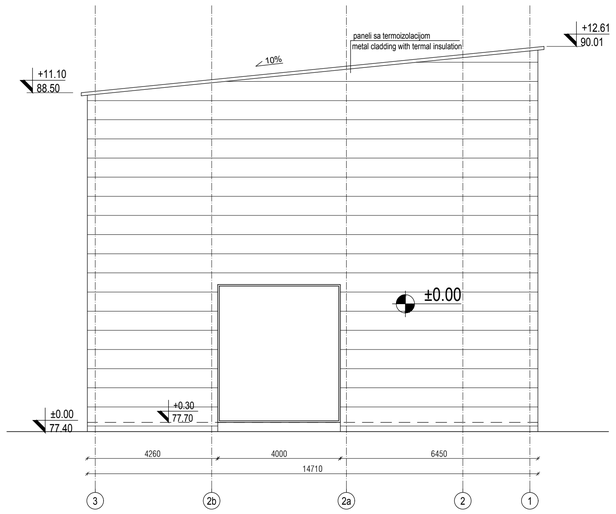

FASADA C / FACADE C

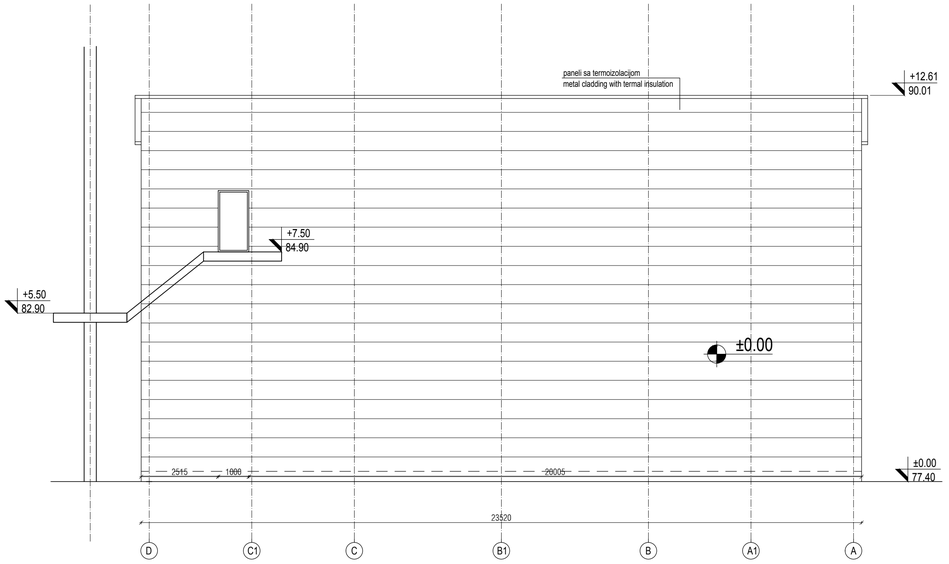

FASADA D / FACADE D

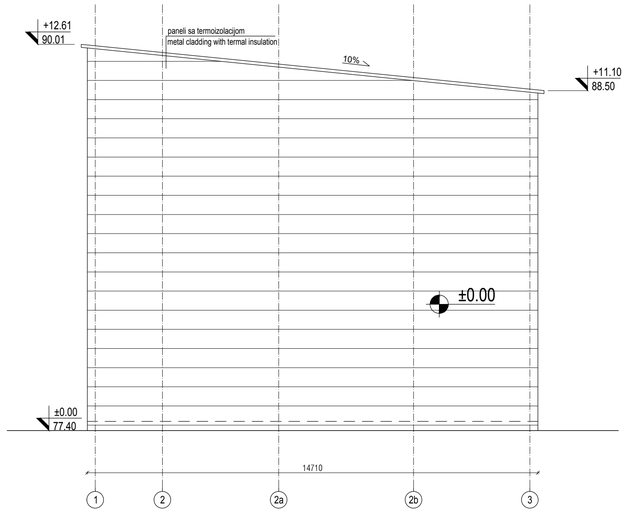

REV.	Opis revizije / Revision description	Datum/Date	Crtao/Drawn	Overio/Appr.
1	Promena pečata crteža / Changed title block	25.01.2018.	M. Žakula, d.i.a.	

Broj ugovora / Contract No :12.01.12625/52-17

Konzorcijum: Consortium:

delta inženjering

www.deltainzenjering.rs

	Ime i prezime / Name	Potpis/Sign.
Odg. projektant: Respon. designer:	Mirjana Lazić dipl.inž.arh.	
Licenca odg.proj.: Res. des. license:	300 4540 03	

Vrsta teh. dok.: Project type: IDR - Idejno rešenje / IDR - Conceptual design

Datum: Date: 25.01.2018. Projekcija: Projection:

Deo projekta: Project part: Projekat arhitekture / Arhitectural Design

Investitor: Client: JP ELEKTROPRIVREDA SRBIJE / PE ELEKTROPRIVREDA SERBIA

Objekat: Complex: Postrojenje za ODG za TE Nikola Tesla A / FGD Construction Project for TPP Nikola Tesla

Postrojenje: Facility: Zona apsorbera / Absorbers area

Deo postrojenja: Unit: C3-02-Pumpna stanica 1 Apsorbera C2 / C3-2HTD-Absorber C2 Recirculation pump building 1

Razmera: Scale: 1/100

Naziv crteža: Drawing name: FASADE / FACADES

Crtež broj: Drawing number: NTFGD-S2.2-IDR-1.0.0-C3-2HTD-004D-rev00

List/od: Page/of: 4/4

Rev. 1

Ime fajla / File name: NTFGD-S2.2-IDR-1.0.0-C3-2HTD-rev00.dwg

DK-017 - Rev. 3 - 19.06.16.

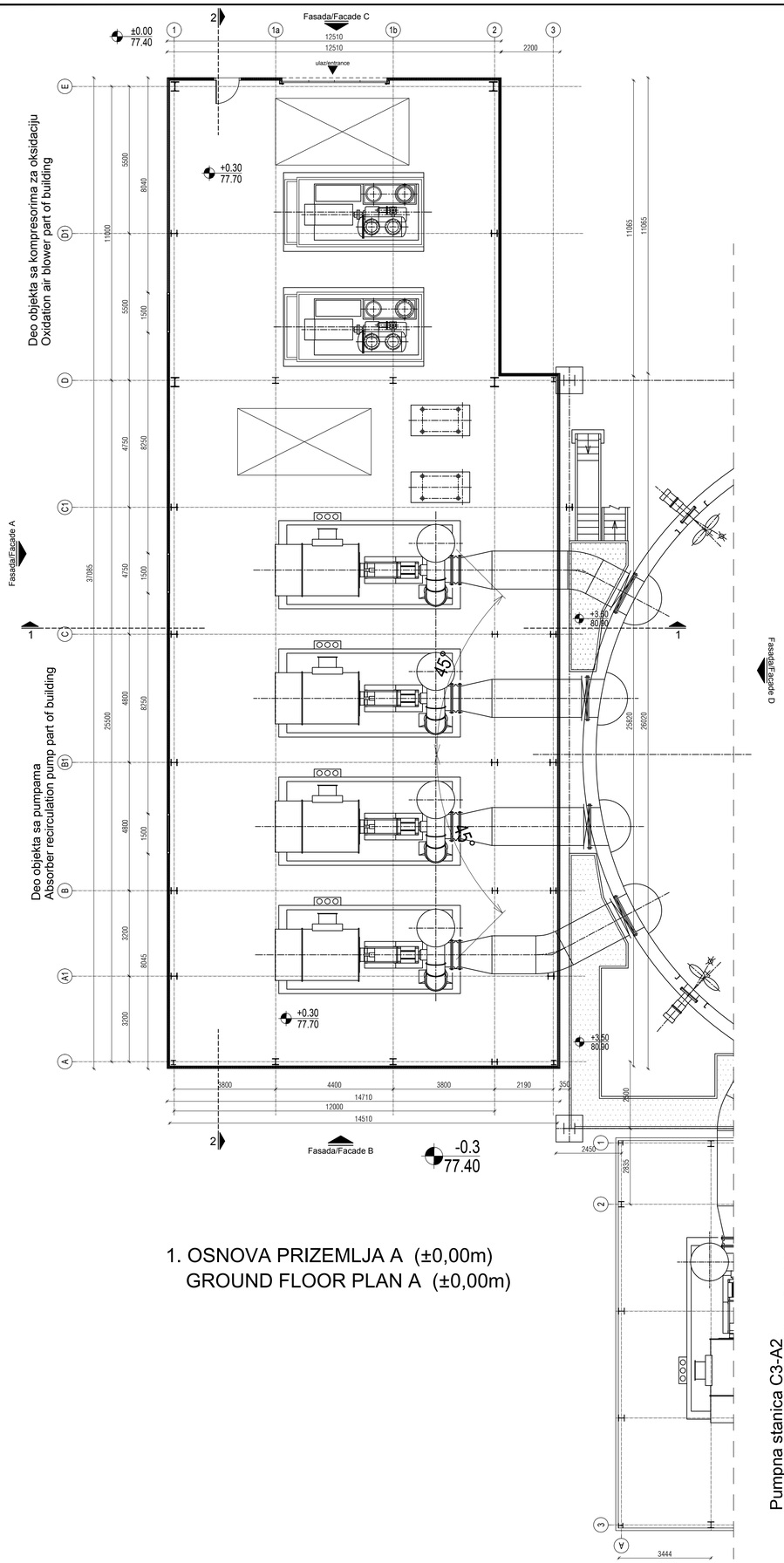

1. OSNOVA PRIZEMLJA A (±0,00m)
GROUND FLOOR PLAN A (±0,00m)

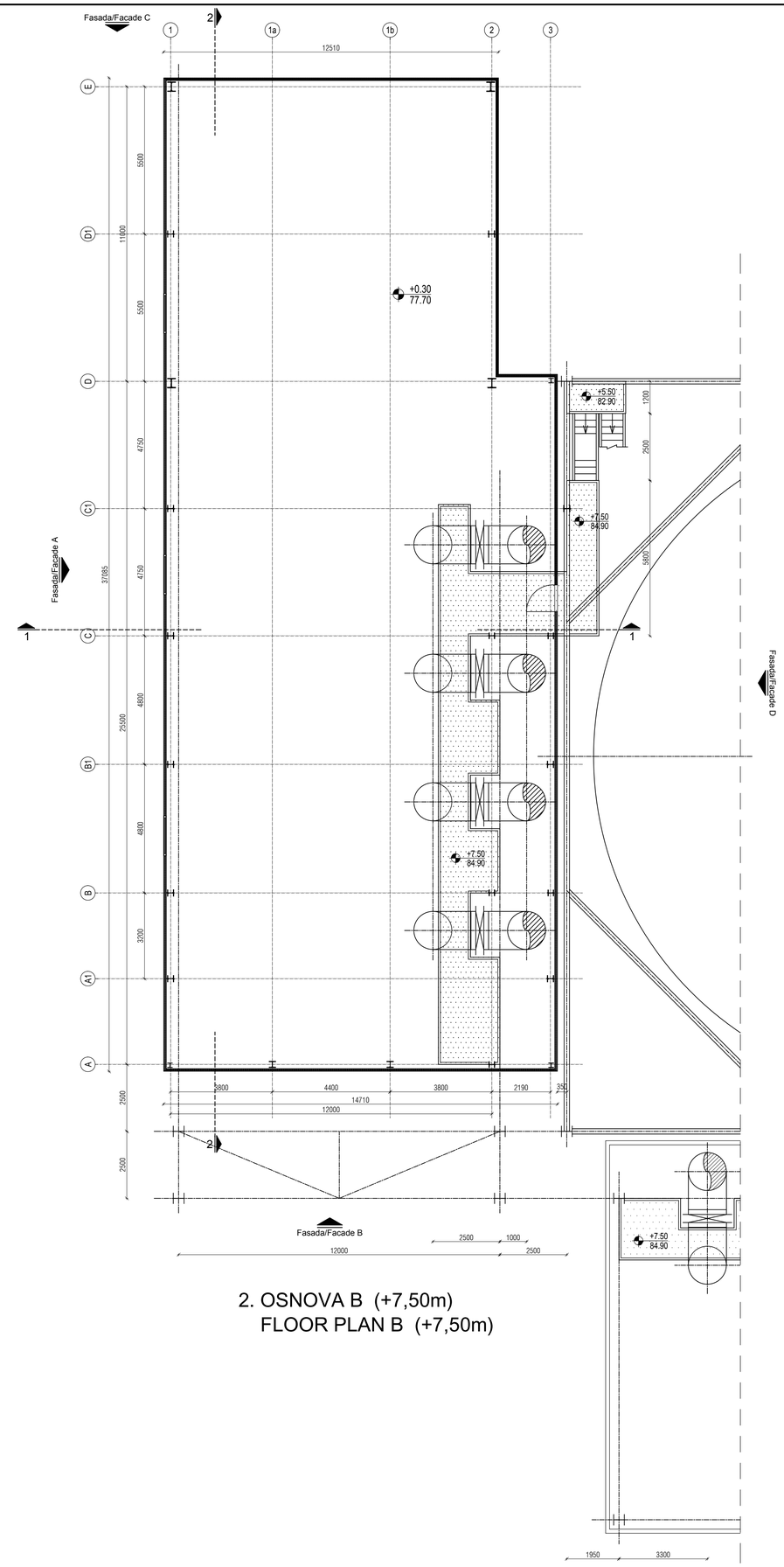

2. OSNOVA B (+7,50m)
FLOOR PLAN B (+7,50m)

Pumpna stanica C3-A2
Recirculation pump building C3-A2

broj / No	NAMENA PROSTORIJA / ROOMS	površina / area (m²)	obim / perimeter (m')
OSNOVA +0.00 /FLOOR PLAN +-0.00			
PUMPNA STANICA I KOMPRESORSKA STANICA ZA OKSIDACIJU / Recirculation pump & Oxidation air blower-C4-A2			
1	PROSTOR PUMPNIH I KOMPRESORSKIH STANICA / SPACE FOR PUMPS	510.41	103.59
	UKUPNO / TOTAL:	510.41	
	NETO POVRŠINA PRIZEMLJA NETO AREA +-0.00:	510.41	
	BRUTO POVRŠINA PRIZEMLJA BRUTO AREA +0.00:	520.73	
	BRGP / GBA:	568.76	
	Površina horizontalne projekcije krova / Area horizontal projection of the roof	545.52	

broj / No	NAMENA PROSTORIJA / ROOMS	površina / area (m²)	obim / perimeter (m')
OSNOVA PLATFORME +7.50 / PLATFORM +7.50			
PUMPNA STANICA I KOMPRESORSKA STANICA ZA OKSIDACIJU / Recirculation pump & Oxidation air blower-C4-A2			
1	PROSTOR PUMPNIH I KOMPRESORSKIH STANICA / SPACE FOR PUMPS	48.03	45.80
	UKUPNO / TOTAL:	48.03	
	NETO POVRŠINA PLATFORME / NETO AREA +7.50:	48.03	
	BRUTO POVRŠINA PLATFORME / BRUTO AREA +7.50:	48.03	
	BRGP / GBA:	568.76	
	Površina horizontalne projekcije krova / Area horizontal projection of the roof	545.52	

REPUBLIKA SRBIJA
Мирјана Б. Лазић
дипл.инж.арх.
300 4540 03
Овлашћени пројектант

REV.	Opis revizije / Revision description	Datum/Date	Crtao/Drawn	Overio/Appr.
1	Promena pečata crteža / Changed title block	25.01.2018.	M. Žakula, d.i.a.	

Broj ugovora / Contract No :12.01.12625/52-17

Konzorcijum: Consortium: MITSUBISHI HITACHI POWER SYSTEMS; STOCHO; MITSUBISHI HITACHI POWER SYSTEMS DUNAMIS; Jedinstvo

delta inženjering
www.deltainzenjering.rs

	Ime i prezime / Name	Potpis/Sign.
Odg. projektant: Respon. designer:	Mirjana Lazić dipl.inž.arh.	
Licenca odg.proj.: Res. des. license:	300 4540 03	

Vrsta teh. dok.: Project type: IDR - Idejno rešenje / IDR - Conceptual design
Datum: Date: 25.01.2018 Projekcija: Projection:
Deo projekta: Project part: Projekat arhitekture / Architectural Design

Investitor: Client: JP ELEKTROPRIVREDA SRBIJE / PE ELEKTROPRIVREDA SERBIA
Objekat: Complex: Postrojenje za ODG za TE Nikola Tesla A / FGD Construction Project for TPP Nikola Tesla
Postrojenje: Facility: Zona apsorbera / Absorbers area
Deo postrojenja: Unit: C4-2HTD-Zgrada recirkulacionih pumpi i duvaljki 2HTD-2 / C4-2HTD-Recirculation pump & Oxidation A.B. building

Razmera: Scale: 1/100
Naziv crteža: Drawing name: OSNOVE ETAŽA / FLOOR PLAN
Crtež broj: Drawing number: NTFGD-S2.2-IDR-1.0.0-C4-2HTD-001D-rev00
List/od: Page/of: 1/4
Rev. 1

Ime fajla / File name: NTFGD-S2.2-IDR-1.0.0-C4-2HTD-rev00.dwg

DI-07 - Rev. 3 - 19.06.15

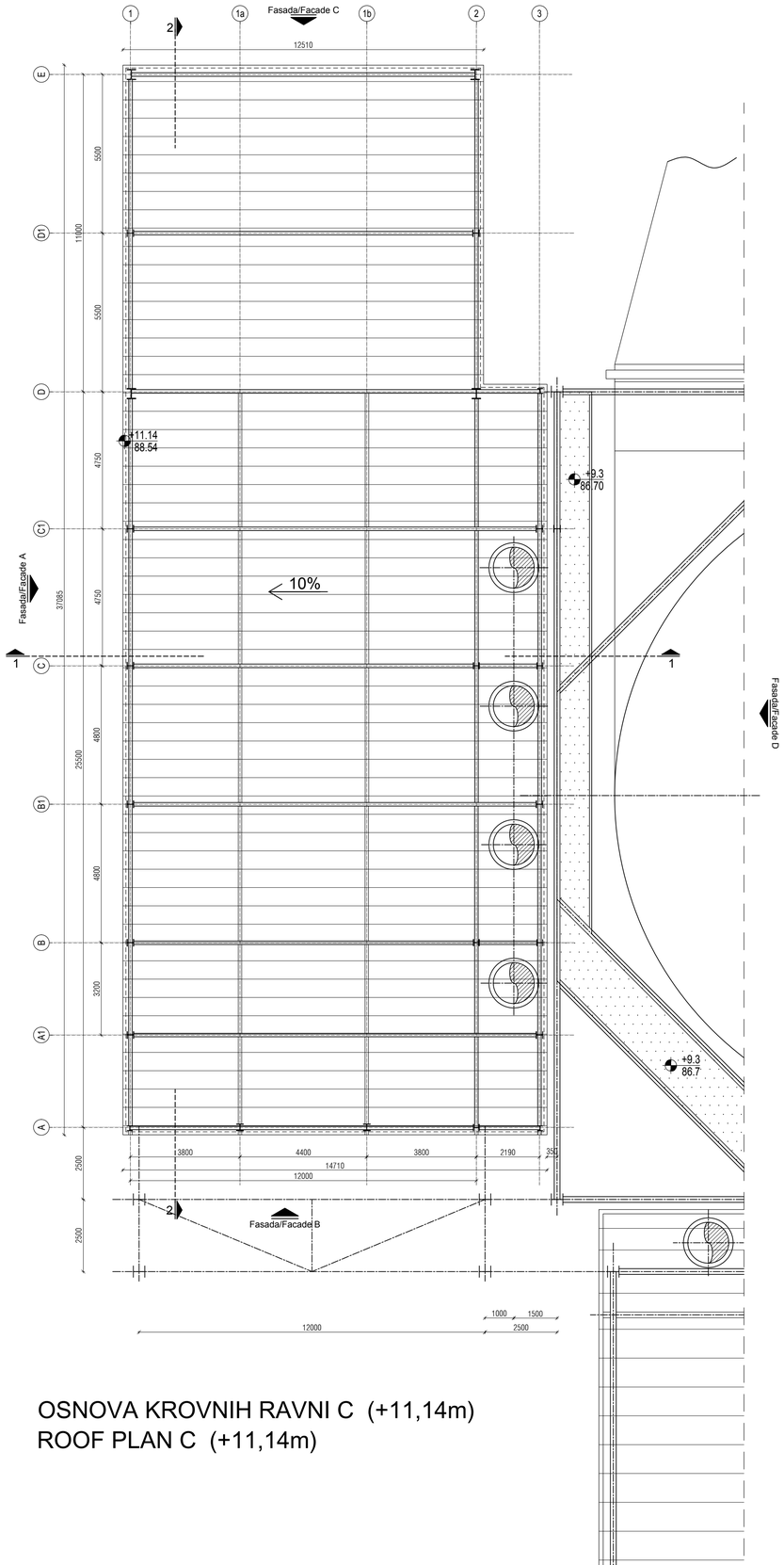

OSNOVA KROVNIH RAVNI C (+11,14m)
ROOF PLAN C (+11,14m)

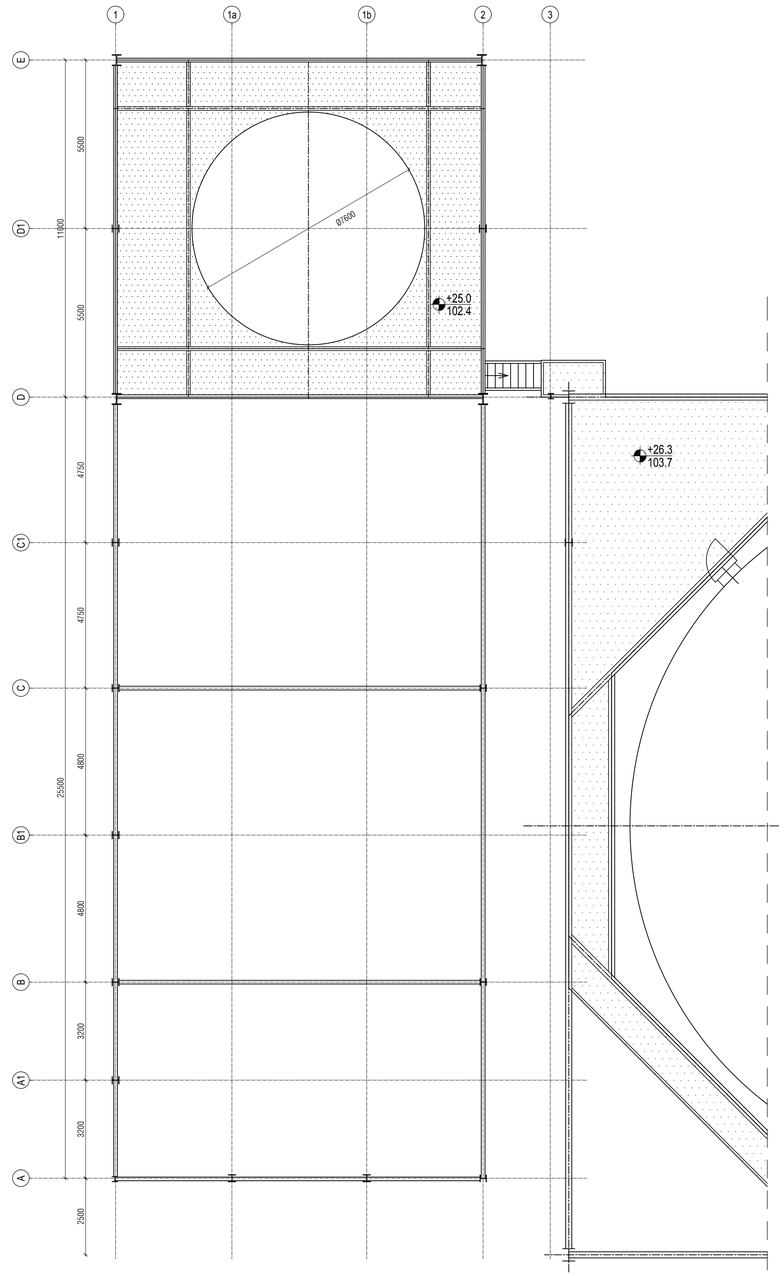

2) OSNOVA E (+25,00m)
FLOOR PLAN E (+25,00m)

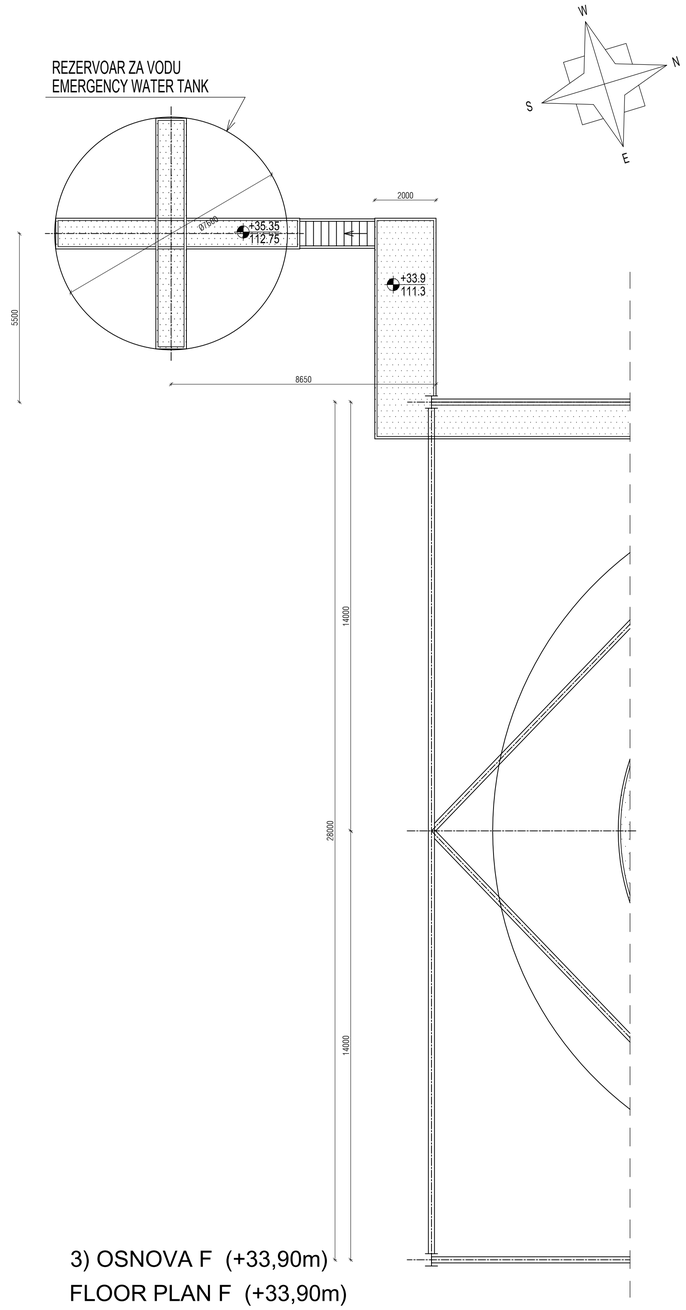

3) OSNOVA F (+33,90m)
FLOOR PLAN F (+33,90m)

LEGENDA MATERIJALA / LEGEND:

ARMIRANI BETON	REINFORCED CONCRETE
NABIJENI BETON	LEAN CONCRETE
MRŠAVI BETON /TAMPON/	LEAN CONCRETE
GITER BLOK	CLAY BLOCK
PUNA OPEKA	BRICK BLOCK
FASADNI I KROVNI PANEL	FACADES AND ROOF PANEL
MOTAŽNI PREGRADNI ZID OD GK PLOČA	PREFABRICATED WALL PANELS
TERMOIZOLACIJA	THERMAL INSOLATION
HIDROIZOLACIJA	HYDROISOLATION
ŠLJUNAK	GRAVEL
ČELIČNA KONSTRUKCIJA	STEEL CONSTRUCTION
OLUCI	CHAMFER
DROBLJENI KAMEN	GRAVEL
NABIJENA ZEMLJA	HUDDLE GROUND

ИНЖЕЊЕРСКА КОМОРА СРБИЈЕ
Мирјана Б. Лазић
дипл.инж.арх.
300 4540 03
ДИПЛОМИРАНИ ИНЖЕЊЕР АРХИТЕКТУРЕ

REV.	Opis revizije / Revision description	Datum/Date	Crtao/Drawn	Overio/Appr.
1	Promena pečata crteža / Changed title block	25.01.2018.	M. Žakula, d.i.a.	

Broj ugovora / Contract No :12.01.12625/52-17

Konzorcijum: Consortium: MITSUBISHI HITACHI POWER SYSTEMS, ITOCHU, MITSUBISHI HITACHI POWER SYSTEMS EUROPE, Jedinstvo

delta inženjering
www.deltainzenjering.rs

Odg. projektant: Respon. designer:	Mirjana Lazić dipl.inž.arh.	Potpis/Sign.	
Licenca odg.proj.: Res. des. license:	300 4540 03		
Vrsta tehn. dok.: Project type:	IDR - Idejno rešenje IDR - Conceptual design		
Datum: Date:	25.01.2018.	Projekcija: Projection:	
Deo projekta: Project part:	Projekat arhitekture Arhitectural Design		

Investitor: Client: JP ELEKTROPRIVREDA SRBIJE / PE ELEKTROPRIVREDA SERBIA

Objekat: Complex: Postrojenje za ODG za TE Nikola Tesla A / FGD Construction Project for TPP Nikola Tesla

Postrojenje: Facility: Zona apsorbera / Absorbers area

Deo postrojenja: Unit: C4-2HTD-Zgrada recirkulacionih pumpi i duvaljki 2HTD-2 / C4-2HTD-Recirculation pump & Oxidation A.B. building

Razmera: Scale:	Naziv crteža: Drawing name:	Crtež broj: Drawing number:	List/od: Page/of:
1/100	OSNOVA KROVA ROOF PLAN	NTFGD-S2.2-IDR-1.0.0-C4-2HTD-002D-rev00	2/4

Rev. 1

Ime fajla / File name: NTFGD-S2.2-IDR-1.0.0-C4-2HTD-rev00.dwg

ZK-D.01 - Rev. 3 - 15.05.15.

PRESEK 2-2
CROSS SECTION 2-2

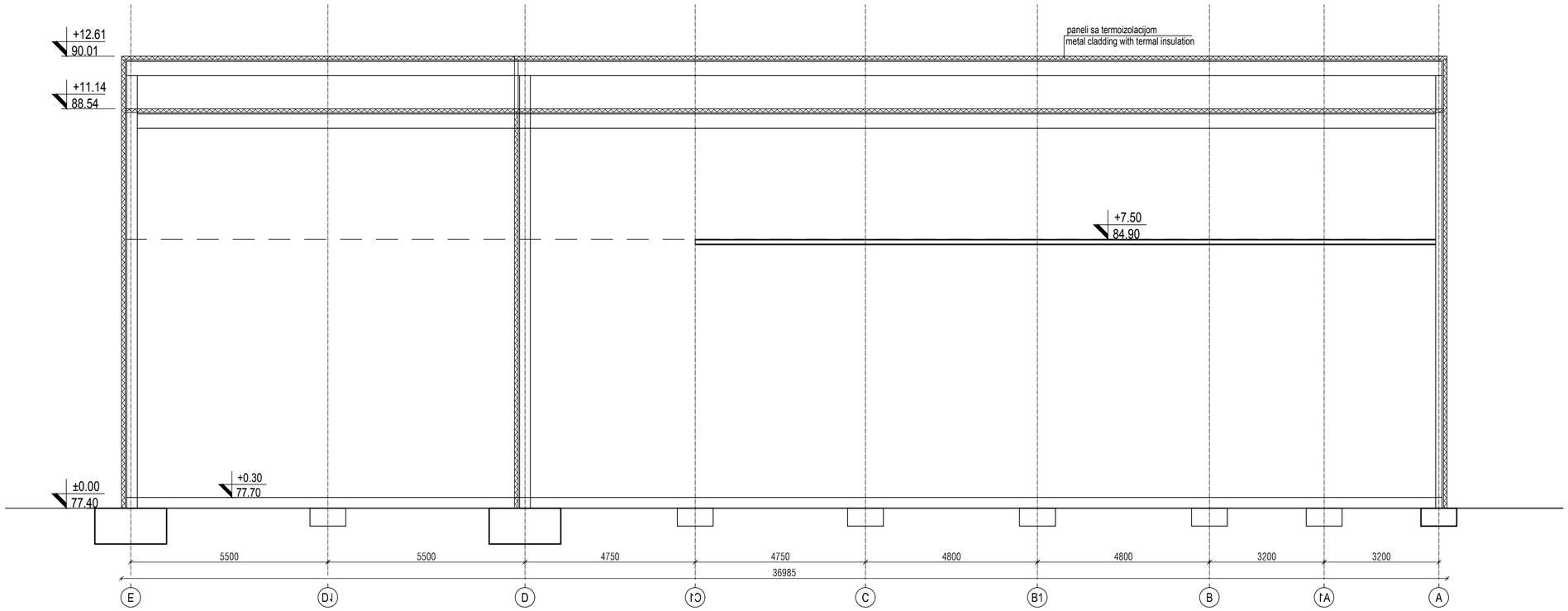

PRESEK 1-1
CROSS SECTION 1-1

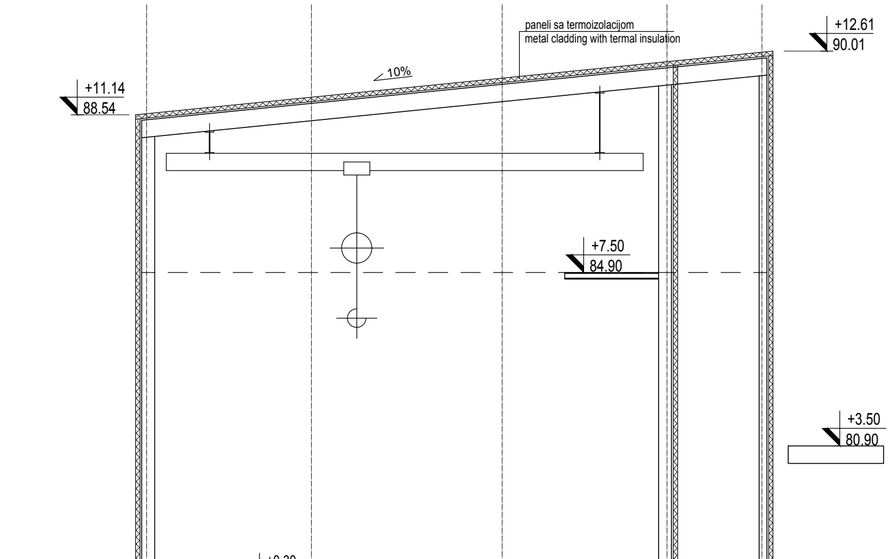

LEGENDA MATERIJALA / LEGEND:

ARMIRANI BETON	REINFORCED CONCRETE
NABIJENI BETON	LEAN CONCRETE
MRŠAVI BETON /TAMPON/	LEAN CONCRETE
GITER BLOK	CLAY BLOCK
PUNA OPEKA	BRICK BLOCK
FASADNI I KROVNI PANEL	FACADES AND ROOF PANEL
MOTAŽNI PREGRADNI ZID OD GK PLOČA	PREFABRICATED WALL PANELS
TERMOIZOLACIJA	THERMAL INSOLATION
HIDROIZOLACIJA	HYDROISOLATION
ŠLJUNAK	GRAVEL
ČELIČNA KONSTRUKCIJA	STEEL CONSTRUCTION
OLUCI	CHAMFER
DROBLJENI KAMEN	GRAVEL
NABIJENA ZEMLJA	HUDDLE GROUND

REV.	Opis revizije / Revision description	Datum/Date	Crtao/Drawn	Overio/Appr.
01	Promena pečata crteža / Changed title block	25.01.2018.	M. Žakula, d.i.a.	

Broj ugovora / Contract No :12.01.12625/52-17

Konzorcium:
Consortium:

MITSUBISHI HITACHI POWER SYSTEMS | ITOCHU | MITSUBISHI HITACHI POWER SYSTEMS EUROPE | Jedinstvo

delta inženjering
www.deltainzenjering.rs

	Ime i prezime / Name	Potpis/Sign.
Odg. projektant: Respon. designer:	Mirjana Lazić dipl.inž.arh.	
Licence odg.proj.: Res. des. license:	300 4540 03	

Vrsta teh. dok.: Project type: IDR - Idejno rešenje / IDR - Conceptual design

Datum: Date: 25.01.2018. Projekcija: Projection:

Deo projekta: Project part: Projekat arhitekture / Arhitectural Design

Investitor: Client: JP ELEKTROPRIVREDA SRBIJE / PE ELEKTROPRIVREDA SERBIA

Objekat: Complex: Postrojenje za ODG za TE Nikola Tesla A / FGD Construction Project for TPP Nikola Tesla

Postrojenje: Facility: Zona apsorbera / Absorbers area

Deo postrojenja: Unit: C4-2HTD-Zgrada recirkulacionih pumpi i duvaljki 2HTD-2 / C4-2HTD-Recirculation pump & Oxidation A.B. building

Razmera: Scale: 1/100

Naziv crteža: Drawing name: PRESECI / CROSS SECTIONS

Crtež broj: Drawing number: NTFGD-S2.2-IDR-1.0.0-C4-2HTD-003D-rev00

List/od: Page/of: 3/4

Rev. 01

Inženjerska komora Srbije — Mirjana Б. Лазић, дипл.инж.арх., 300 4540 03

Ime fajla / File name: NTFGD-S2.2-IDR-1.0.0-C4-2HTD-rev00.dwg

ZA Q.01 - Rev. 3 - 15.05.15.

FASADA A
FACADE A

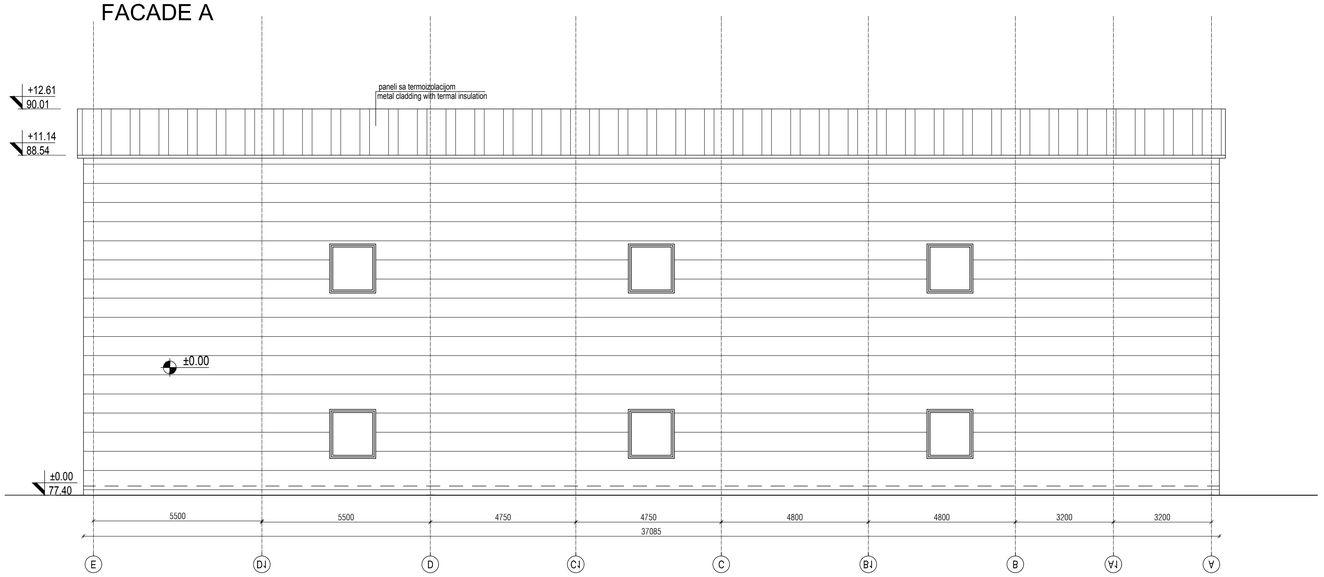

FASADA B
FACADE B

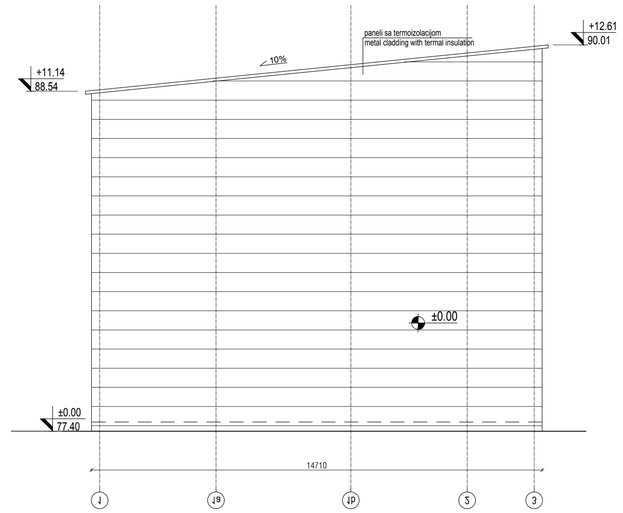

FASADA D
FACADE D

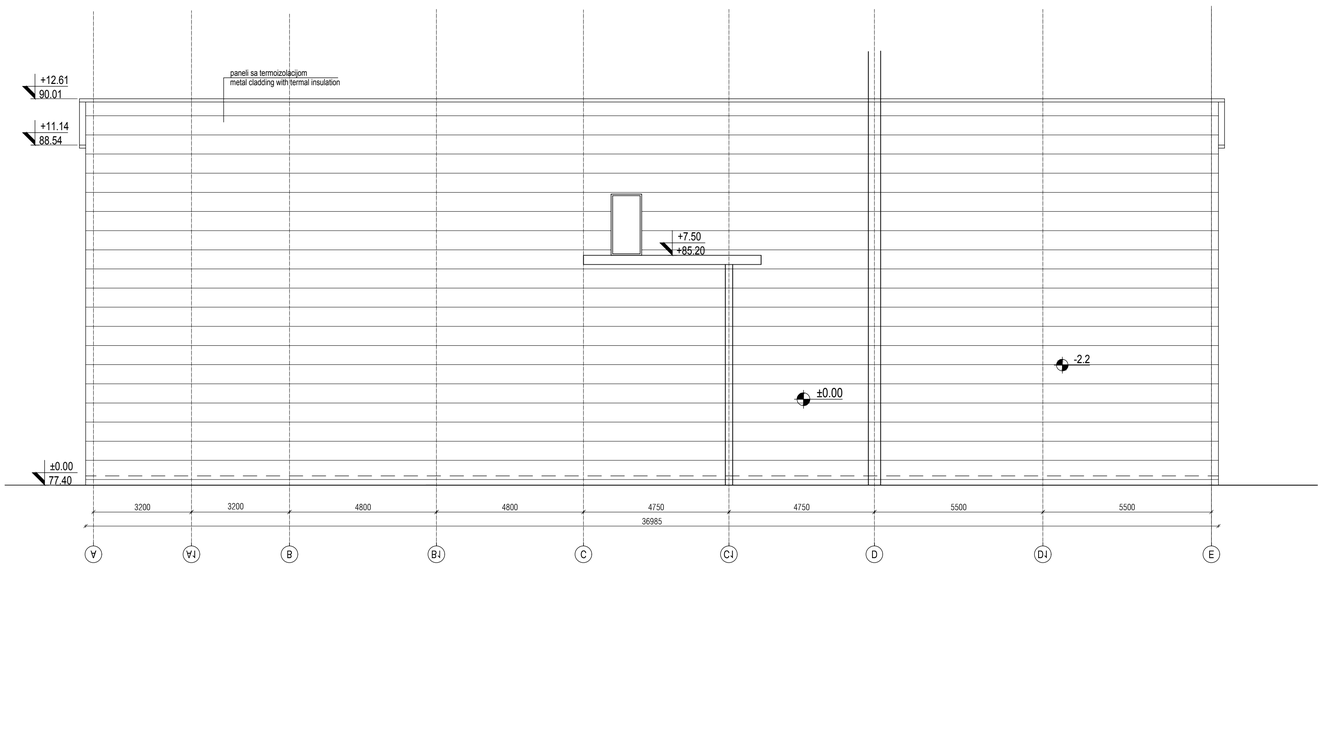

FASADA C
FACADE C

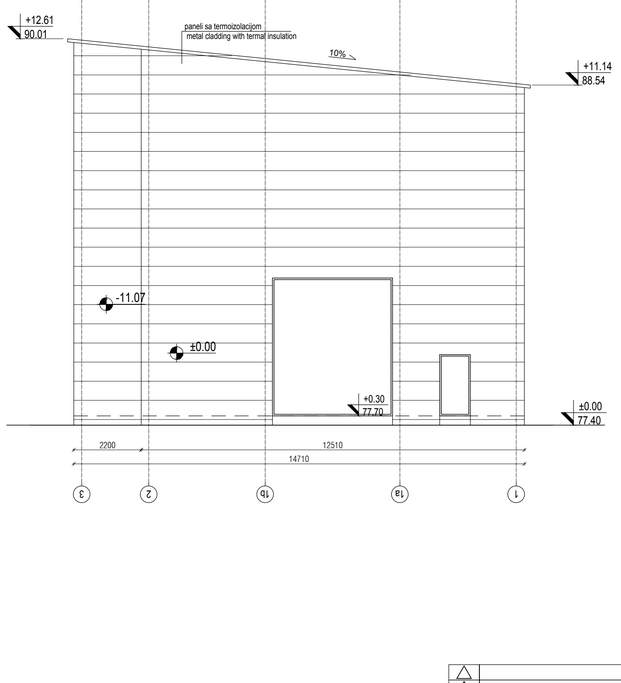

REV.	Opis revizije / Revision description	Datum/Date	Crtao/Drawn	Overio/Appr.
1	Promena pečata crteža / Changed title block	25.01.2018.	M. Žakula, d.i.a.	

Broj ugovora / Contract No :12.01.12625/52-17

Konzorcijum: Consortium:

delta inženjering www.deltainzenjering.rs	Ime i prezime / Name	Potpis/Sign.	Investitor: Client: JP ELEKTROPRIVREDA SRBIJE / PE ELEKTROPRIVREDA SERBIA
	Odg. projektant: Respon. designer: Mirjana Lazić dipl.inž.arh.		Objekat: Complex: Postrojenje za ODG za TE Nikola Tesla A / FGD Construction Project for TPP Nikola Tesla
	Licenca odg.proj.: Res. des. license: 300 4540 03		
	Vrsta teh. dok.: Project type: IDR - Idejno rešenje / IDR - Conceptual design		Postrojenje: Facility: Zona apsorbera / Absorbers area
	Datum: Date: 25.01.2018.	Projekcija: Projection:	
	Deo projekta: Project part: Projekat arhitekture / Arhitectural Design		Deo postrojenja: Unit: C4-2HTD-Zgrada recirkulacionih pumpi i duvaljki 2HTD-2 / C4-2HTD-Recirculation pump & Oxidation A.B. building

Razmera: Scale:	Naziv crteža: Drawing name:	Crtež broj: Drawing number:	Listov: Page/of:
1/100	FASADE / FACADES	NTFGD-S2.2-IDR-1.0.0-C4-2HTD-004D-rev00	4/4

Rev. 1

Mirjana Lazić dipl.inž.arh. 300 4540 03

Ime fajla / File name: NTFGD-S2.2-IDR-1.0.0-C4-2HTD-rev00.dwg

DK-037 - Rev. 2 - 15.05.15

FGD - KONTROLNA ZGRADA / FGD CONTROL / ELECTRICAL BUILDING

OSNOVA PODRUMA / BASEMENT FLOOR

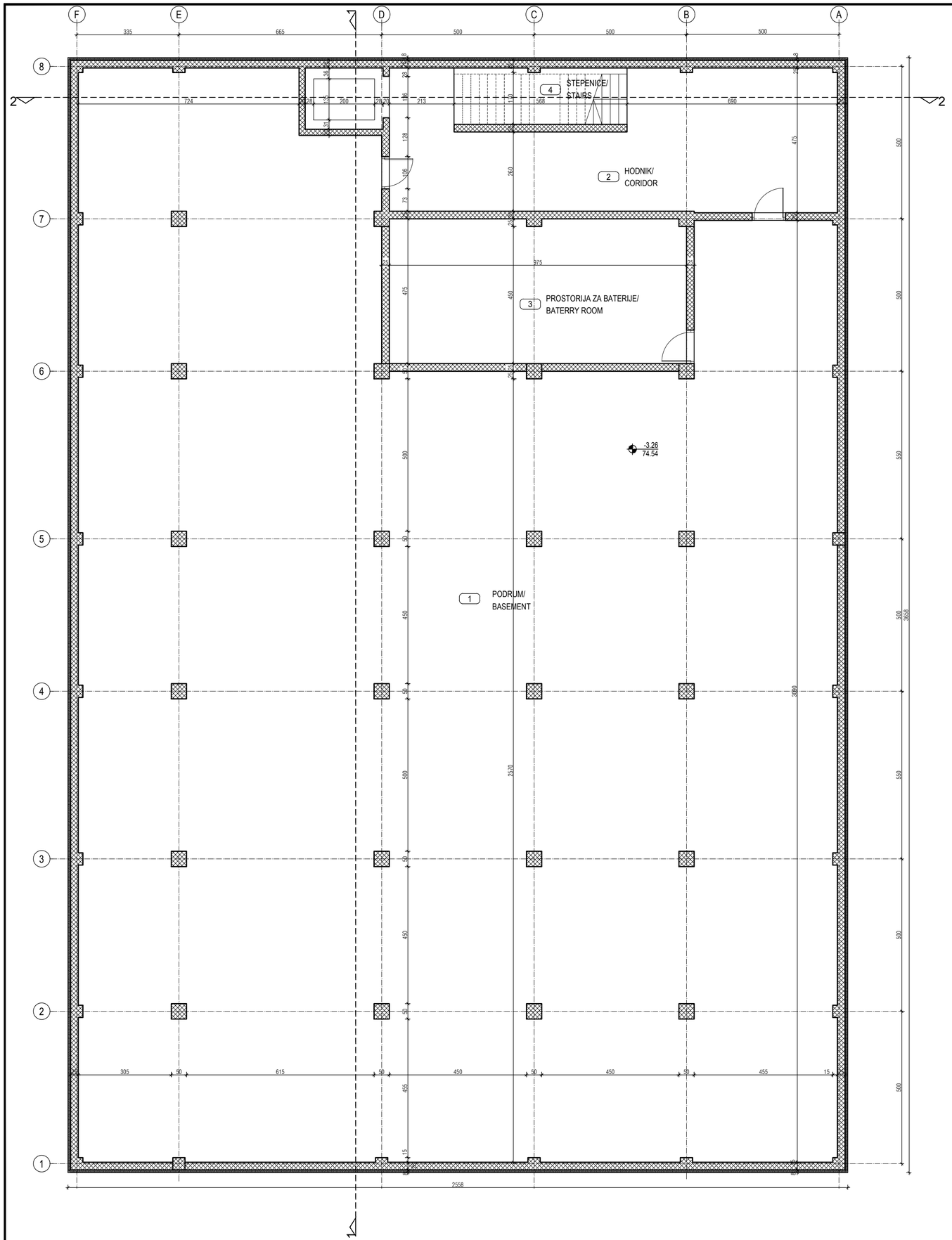

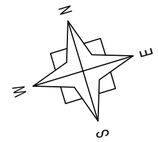

broj / No.	NAMENA PROSTORIJA / ROOMS	površina /area (m²)	obim / perimeter (m')
OSNOVA PODRUMA / BASEMENT FLOOR			
GLAVNA ELEKTRO KOMANDNA ZGRADA / FGD CONTROL ELEKTRICAL BUILDING			
1	Podrum / Basement	760.82	138.82
2	Hodnik / Corridor	57.32	43.39
3	Prostorija za baterije / Baterry room	46.13	29.50
4	Stepenice / Stair	10.44	15.35
	UKUPNO / TOTAL:	874.71	
	NETO POVRŠINA PODRUMA/ NETO AREA OF BASEMENT:	874.71	
	BRUTO POVRŠINA POVRŠINA / BRUTO AREA OF BASEMENT:	935.71	
	BRGP / GBA:	2.822,09	
	POVRŠINA HORIZONTALNE PROJEKCIJE KROVA / AREA HORIZONTAL PROJECTIONS OF THE ROOF:	943.19	

LEGENDA MATERIJALA / LEGEND:

ARMIRANI BETON	REINFORCED CONCRETE
NABIJENI BETON	LEAN CONCRETE
MRŠAVI BETON /TAMPON/	LEAN CONCRETE
GITER BLOK	CLAY BLOCK
PUNA OPEKA	BRICK BLOCK
FASADNI I KROVNI PANEL	FACADES AND ROOF PANEL
MOTAŽNI PREGRADNI ZID OD GK PLOČA	PREFABRICATED WALL PANELS
TERMOIZOLACIJA	THERMAL INSOLATION
HIDROIZOLACIJA	HYDROISOLATION
ŠLJUNAK	GRAVEL
ČELIČNA KONSTRUKCIJA	STEEL CONSTRUCTION
OLUCI	CHAMFER
DROBLJENI KAMEN	GRAVEL
NABIJENA ZEMLJA	HUDDLE GROUND

ПРИВРЕДНА КОМОРА СРБИЈЕ
Мирјана Б. Лазић
дипл.инж.арх.
300 4540 03
ОВЛАШЋЕНИ ПРОЈЕКТАНТ

REV.	Opis revizije / Revision description	Datum/Date	Crtao/Drawn	Overio/Appr.
1				
2				
01				

Broj ugovora / Contract No :12.01.12625/52-17

Konzorcium:
Consortium:

MITSUBISHI HITACHI POWER SYSTEMS | ГОСКО | MITSUBISHI HITACHI POWER SYSTEMS EUROPE | Jedinstvo

delta inženjering
www.deltainzenjering.rs

	Ime i prezime / Name	Potpis/Sign.
Odg. projektant: Respon. designer:	Mirjana Lazić dipl.inž.arh.	
Licenca odg.proj.: Res. des. license:	300 4540 03	

Vrsta teh. dok.: / Project type: IDR - Idejno rešenje / IDR - Conceptual design

Datum: / Date: 25.01.2018. Projekcija: / Projection:

Deo projekta: / Project part: Projekat arhitekture / Arhitectural Design

Investitor: / Client: JP ELEKTROPRIVREDA SRBIJE / PE ELEKTROPRIVREDA SERBIA

Objekat: / Complex: Postrojenje za ODG za TE Nikola Tesla A / FGD Construction Project for TPP Nikola Tesla

Postrojenje: / Facility: Zona apsorbera / Absorbers area

Deo postrojenja: / Unit: C5-Glavna elektro-komandna zgrada / C5-FGD control/electrical building

Razmera: / Scale: 1/100

Naziv crteža: / Drawing name: OSNOVA PODRUMA / BASEMENT FLOOR PLAN

Crtež broj: / Drawing number: NTFGD-S2.5-IDR-1.0.0-C5-001D-rev00

List/od: / Page/of: 1/6

Rev. 00

Ime fajla / File name: NTFGD-S2.5-IDR-1.0.0-C5-re-00.dwg

ZA Q.01 - Rev. 3 - 15.05.15.

FGD - KONTROLNA ZGRADA / FGD CONTROL / ELECTRICAL BUILDING

OSNOVA PRIZEMLJA / GROUND FLOOR

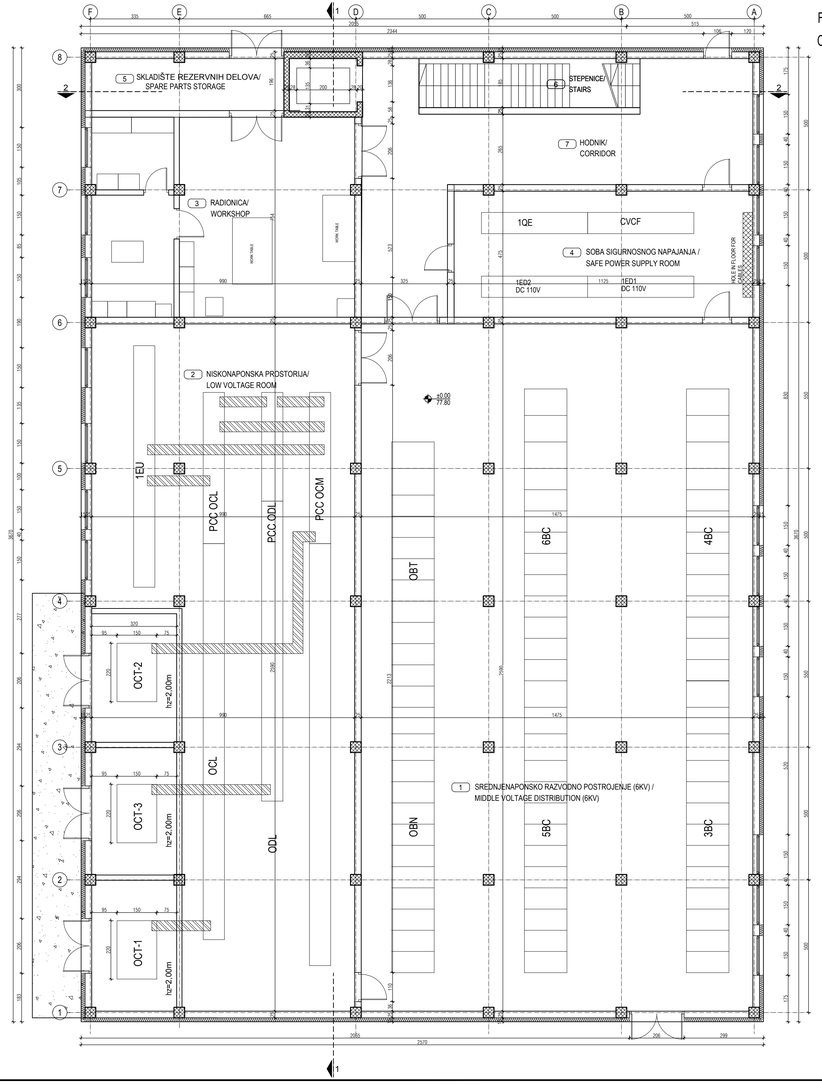

broj/No	NAMENA PROSTORIJA / ROOMS	površina / area	obim / perimeter
		(m²)	(m¹)
	OSNOVA PRIZEMLJA / GROUND FLOOR		
	GLAVNA ELEKTRO KOMANDNA ZGRADA / FGD CONTROL ELEKTRICAL BUILDING		
1	Srednje naponsko razvodno postrojenje / Middle voltage distribution	381.49	83.69
2	Niskonaponska prostorija / Low voltage room	250.73	123.73
3	Radionica / Workshop	72.75	52.69
4	Soba sigurnosnog napajanja / Safe power supply room	53.29	32.59
5	Skladište rezervnih delova / Spare parts storage	14.10	19.31
6	Stepenice / Stairs	15.27	20.94
7	Hodnik /Corridor	68.56	53.15
	UKUPNO / TOTAL:	856.19	
	NETO POVRŠINA PRIZEMLJA / NETO AREA GROUND FLOOR:	856.19	
	BRUTO POVRŠINA PRIZEMLJA / BRUTO AREA GROUND FLOOR:	943.19	
	BRGP / GBA:	2.822.09	
	POVRŠINA HORIZONTALNE PROJEKCIJE KROVA / AREA HORIZONTAL PROJECTIONS OF THE ROOF:	943.19	

FGD - KONTROLNA ZGRADA / FGD CONTROL / ELECTRICAL BUILDING

OSNOVA PRVOG SPRATA / FIRST FLOOR PLAN

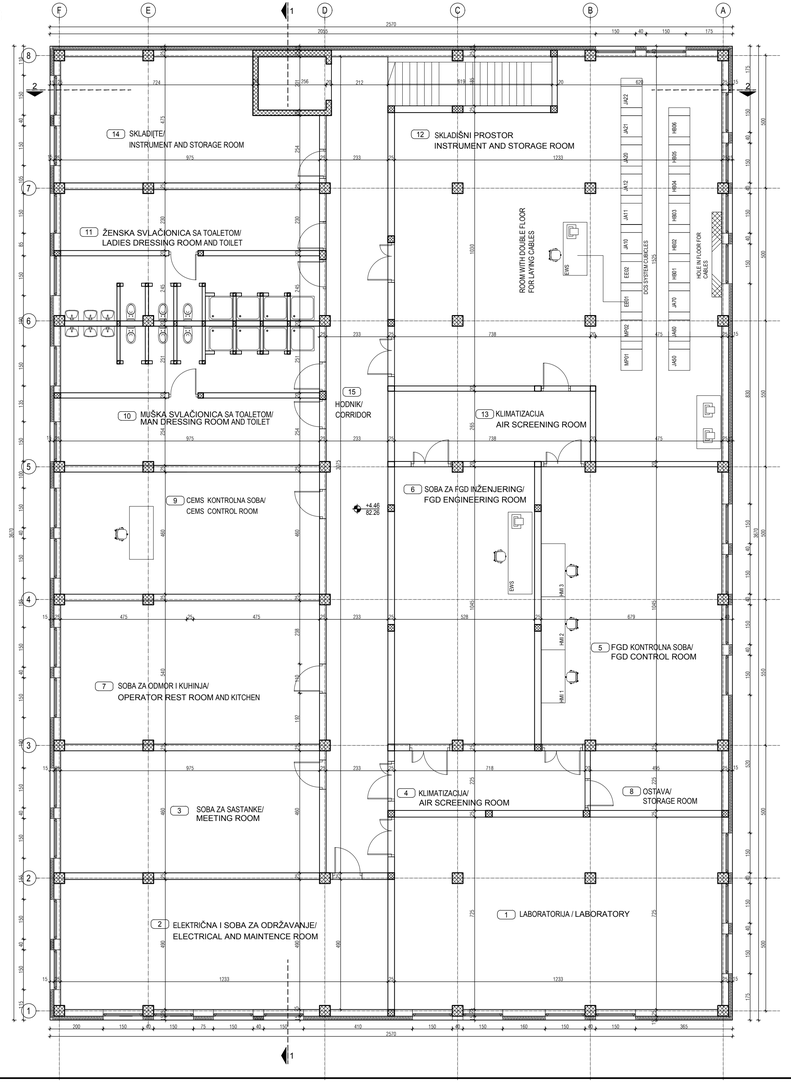

broj /No.	NAMENA PROSTORIJA / ROOMS	površina / area	obim / perimeter
		(m²)	(m¹)
	OSNOVA PRVOG SPRATA / FIRST FLOOR		
	GLAVNA ELEKTRO KOMANDNA ZGRADA / FGD CONTROL ELEKTRICAL BUILDING		
1	Laboratorija / Laboratory	89.15	40.05
2	Električna i soba za održavanje / Electrical and maintance room	60.10	35.64
3	Soba za sastanke / Meeting room	44.85	28.70
4	Klimatizacija / Air screening room	16.14	18.85
5	FGD-Kontrolna soba / FGD-Control room	70.80	35.49
6	Soba za FGD inženjering / FGD Engineering room	54.98	32.15
7	Soba za odmor i kuhinja / Operator rest room and kitchen	52.48	30.89
8	Ostava / Storage room	11.13	14.40
9	CEMS -Kontrolna soba / CEMS -Control room	44.85	28.70
10	Muška svlačionica sa toaletom / Man dressing room and toilet	48.11	68.87
11	Ženska svlačionica sa toaletom / Ladies dressing room and toilet	45.09	68.24
12	Skladišni prostor / Instrument and storage room	153.29	56.05
13	Klima / Air screening room	19.50	20.04
14	Skladište / Storage room	40.68	29.30
15	Hodnik / Corridor	70.73	67.64
	UKUPNO / TOTAL:	821.88	
	NETO POVRŠINA I SPRATA / NETO AREA I FLOOR:	821.88	
	BRUTO POVRŠINA I SPRATA/BRUTO AREA I FLOOR:	943.19	
	BRGP / GBA:	2.822.09	
	POVRŠINA HORIZONTALNE PROJEKCIJE KROVA / AREA HORIZONTAL PROJECTIONS OF THE ROOF:	943.19	

LEGENDA MATERIJALA / LEGEND:

- ARMIRANI BETON — REINFORCED CONCRETE
- NABIJENI BETON — LEAN CONCRETE
- MRŠAVI BETON /TAMPON/ — LEAN CONCRETE
- GITER BLOK — CLAY BLOCK
- PUNA OPEKA — BRICK BLOCK
- FASADNI I KROVNI PANEL — FACADES AND ROOF PANEL
- MONTAŽNI PREGRADNI ZID OD GK PLOČA — PREFABRICATED WALL PANELS
- TERMOIZOLACIJA — THERMAL INSOLATION
- HIDROIZOLACIJA — HYDROISOLATION
- ŠLJUNAK — GRAVEL
- ČELIČNA KONSTRUKCIJA — STEEL CONSTRUCTION
- OLUCI — CHAMFER
- DROBLJENI KAMEN — GRAVEL
- NABIJENA ZEMLJA — HUDDLE GROUND

REV.	Opis revizije / Revision description	Datum/Date	Crtao/Drawn	Overio/Appr.
1				
2				
3				

Broj ugovora / Contract No :12.01.12625/52-17

Konzorcijum: Consortium: MHI MITSUBISHI HITACHI POWER SYSTEMS EUROPE; STOCHO; MHI MITSUBISHI HEAVY INDUSTRIES; Jedinstvo

delta inženjering — www.deltainzenjering.rs

	Ime i prezime / Name	Potpis/Sign.
Odg. projektant: Respon. designer:	Mirjana Lazić dipl.inž.arh.	
Licenca odg.proj.: Res. des. license:	300 4540 03	
Vrsta teh. dok.: Project type:	IDR - Idejno rešenje / IDR - Conceptual design	
Datum: Date:	25.01.2018.	Projekcija: Projection:

Investitor: Client: JP ELEKTROPRIVREDA SRBIJE / PE ELEKTROPRIVREDA SERBIA

Objekat: Complex: Postrojenje za ODG za TE Nikola Tesla A / FGD Construction Project for TPP Nikola Tesla

Postrojenje: Facility: Zona apsorbera / Absorbers area

Deo postrojenja: Unit: C5-Glavna elektro-komandna zgrada / C5-FGD control/electrical building

Razmera: Scale: 1/100

Naziv crteža: Drawing name: OSNOVA PRIZEMLJA I OSNOVA 1.SPRATA / GROUND FLOOR PLAN AND FIRST FLOOP PLAN

Crtež broj: Drawing number: NTFGD-S2.5-IDR-1.0.0-C5-002D-rev00

Listić: Page/of: 2/6

Rev.: 1

Mirjana Б. Лазић дипл.инж.арх. 300 4540 03 Inženjerska komora Srbije

Ime fajla / File name: NTFGD-S2.5-IDR-1.0.0-C5-rev00.dwg

25.01.18 - Rev. 0 - 14:47:14

FGD - KONTROLNA ZGRADA / FGD CONTROL / ELECTRICAL BUILDING
OSNOVA KROVNIH RAVNI / ROOF PLAN

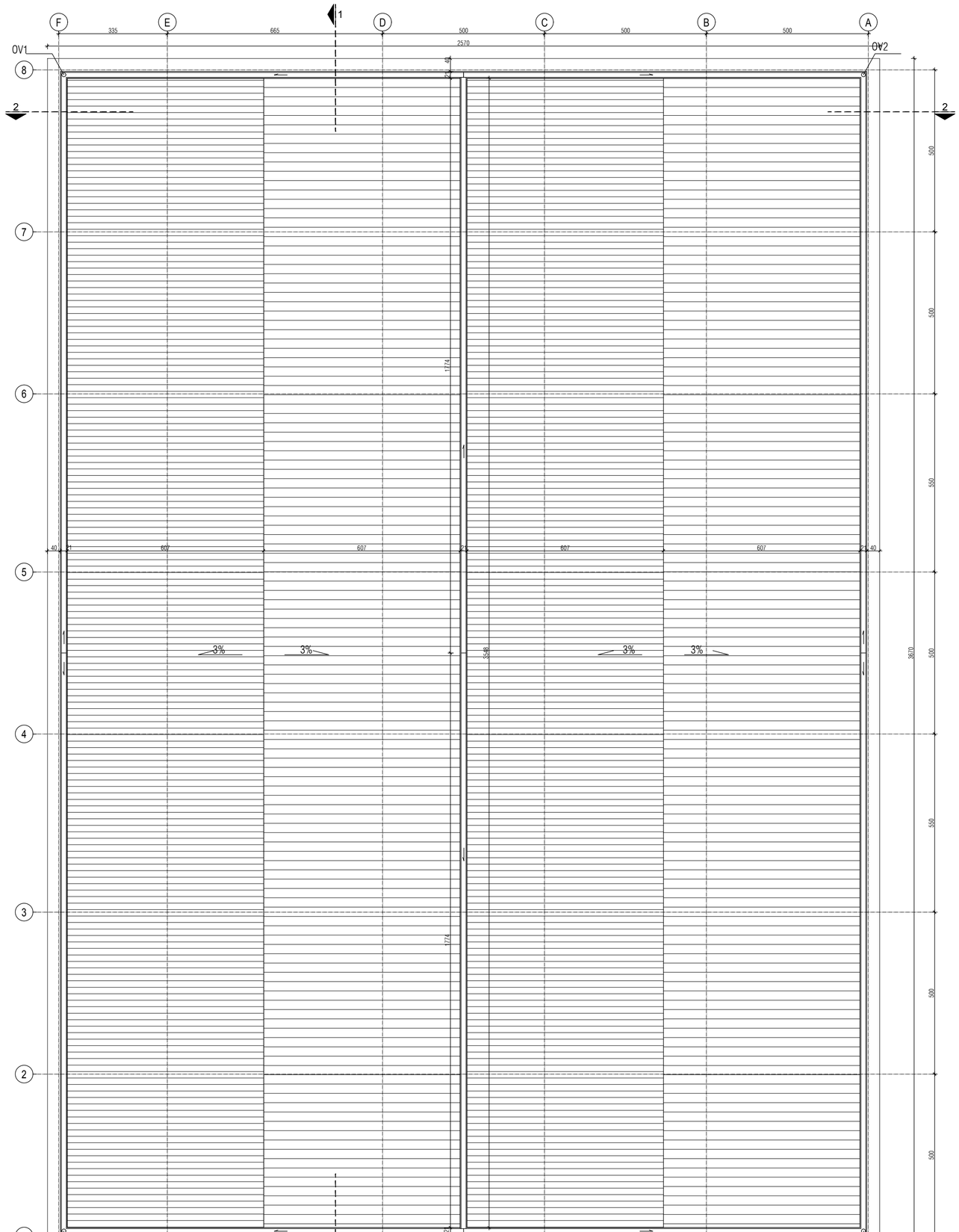

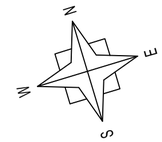

broj / No.	NAMENA PROSTORIJA / ROOMS	površina /area (m²)	obim / perimeter (m')
	OSNOVA PODRUMA / BASEMENT FLOOR		
	GLAVNA ELEKTRO KOMANDNA ZGRADA / FGD CONTROL ELEKTRICAL BUILDING		
	BRGP / GBA:	2.822,09	
	POVRŠINA HORIZONTALNE PROJEKCIJE KROVA / AREA HORIZONTAL PROJECTIONS OF THE ROOF:	943.19	

LEGENDA MATERIJALA / LEGEND:

ARMIRANI BETON	REINFORCED CONCRETE
NABIJENI BETON	LEAN CONCRETE
MRŠAVI BETON /TAMPON/	LEAN CONCRETE
GITER BLOK	CLAY BLOCK
PUNA OPEKA	BRICK BLOCK
FASADNI I KROVNI PANEL	FACADES AND ROOF PANEL
MOTAŽNI PREGRADNI ZID OD GK PLOČA	PREFABRICATED WALL PANELS
TERMOIZOLACIJA	THERMAL INSOLATION
HIDROIZOLACIJA	HYDROISOLATION
ŠLJUNAK	GRAVEL
ČELIČNA KONSTRUKCIJA	STEEL CONSTRUCTION
OLUCI	CHAMFER
DROBLJENI KAMEN	GRAVEL
NABIJENA ZEMLJA	HUDDLE GROUND

REV.	Opis revizije / Revision description	Datum/Date	Crtao/Drawn	Overio/Appr.
-				
0				
01				

Broj ugovora / Contract No :12.01.12625/52-17

Konzorcium:
Consortium:

MITSUBISHI HITACHI POWER SYSTEMS | ITOCHU | MITSUBISHI HITACHI POWER SYSTEMS EUROPE | Jedinstvo

delta inženjering
www.deltainzenjering.rs

	Ime i prezime / Name	Potpis/Sign.
Odg. projektant: Respon. designer:	Mirjana Lazić dipl.inž.arh.	
Licenca odg.proj.: Res. des. license:	300 4540 03	

Vrsta teh. dok.: Project type: IDR - Idejno rešenje / IDR - Conceptual design
Datum: Date: 25.01.2018.
Projekcija: Projection:
Deo projekta: Project part: Projekat arhitekture / Arhitectural Design

Investitor: Client: JP ELEKTROPRIVREDA SRBIJE / PE ELEKTROPRIVREDA SERBIA
Objekat: Complex: Postrojenje za ODG za TE Nikola Tesla A / FGD Construction Project for TPP Nikola Tesla
Postrojenje: Facility: Zona apsorbera / Absorbers area
Deo postrojenja: Unit: C5-Glavna elektro-komandna zgrada / C5-FGD control/electrical building

Razmera: Scale: 1/100
Naziv crteža: Drawing name: OSNOVA KROVNIH RAVNI / ROOF PLAN
Crtež broj: Drawing number: NTFGD-S2.5-IDR-1.0.0-C5-003D-rev00
List/od: Page/of: 3/6
Rev. 00

ИНЖЕЊЕРСКА КОМОРА СРБИЈЕ
Мирјана Б. Лазић
дипл.инж.арх.
300 4540 03
ОВЛАШЋЕНИ ПРОJЕКТАНТ

Ime fajla / File name: NTFGD-S2.5-IDR-1.0.0-C5-ev00.dwg

ZA.Q.01 - Rev. 3 - 15.05.15

FGD - KONTROLNA ZGRADA / FGD CONTROL / ELECTRICAL BUILDING
PRESECI 1-1 , 2-2 / CROSS SECTION 1-1, 2-2

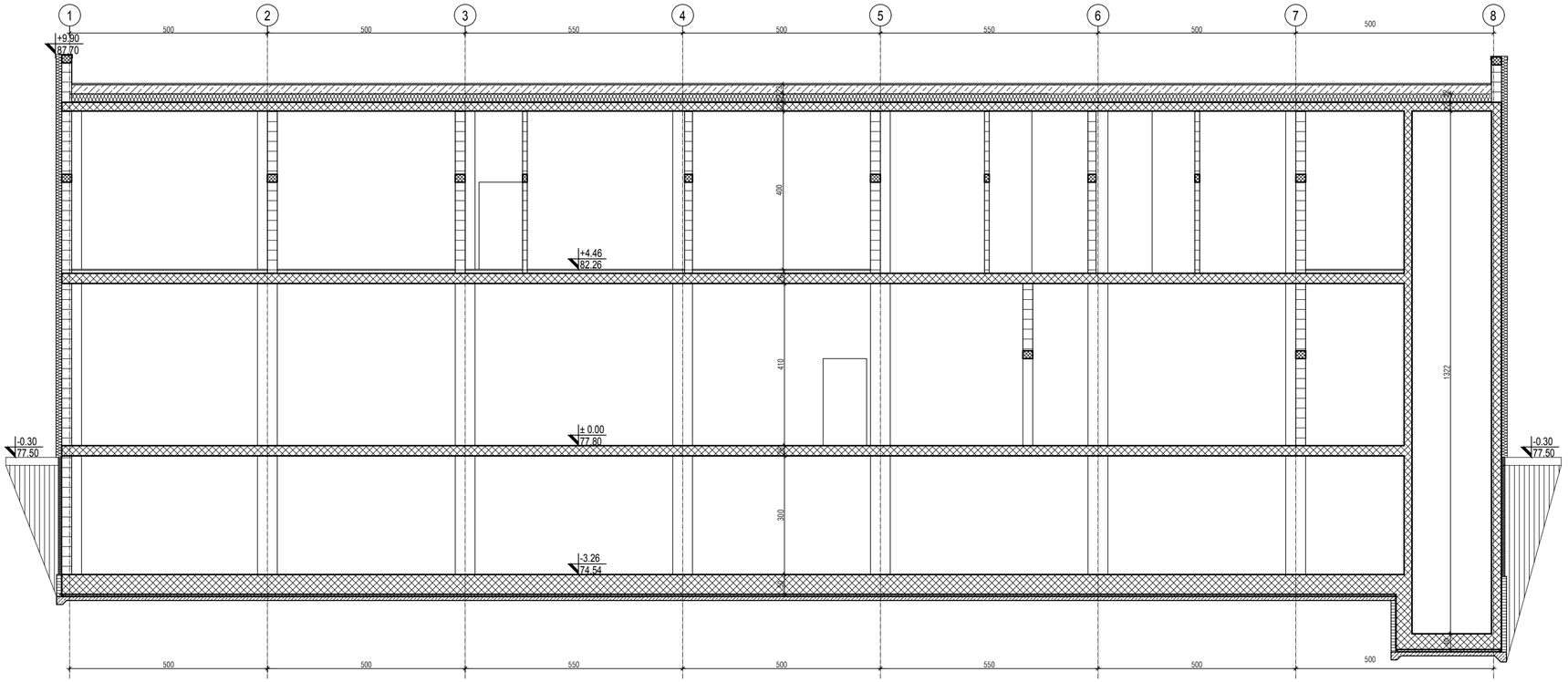

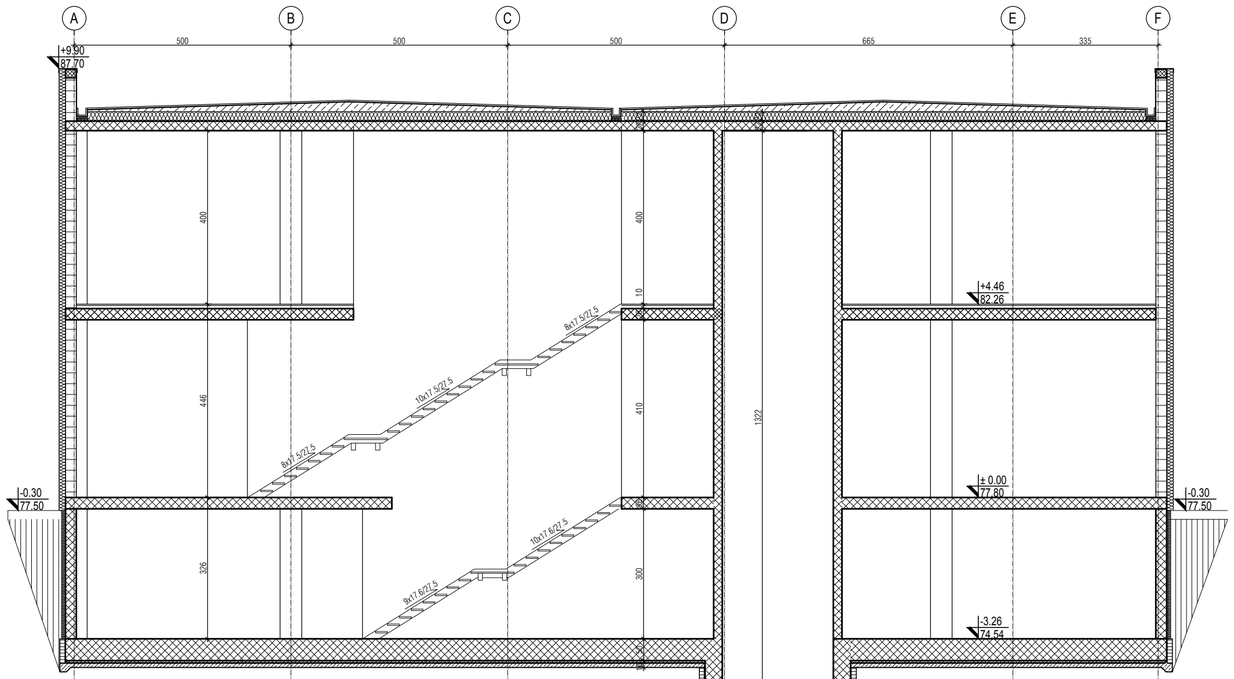

LEGENDA MATERIJALA / LEGEND:

ARMIRANI BETON	REINFORCED CONCRETE
NABIJENI BETON	LEAN CONCRETE
MRŠAVI BETON /TAMPON/	LEAN CONCRETE
GITER BLOK	CLAY BLOCK
PUNA OPEKA	BRICK BLOCK
FASADNI I KROVNI PANEL	FACADES AND ROOF PANEL
MOTAŽNI PREGRADNI ZID OD GK PLOČA	PREFABRICATED WALL PANELS
TERMOIZOLACIJA	THERMAL INSOLATION
HIDROIZOLACIJA	HYDROISOLATION
ŠLJUNAK	GRAVEL
ČELIČNA KONSTRUKCIJA	STEEL CONSTRUCTION
OLUCI	CHAMFER
DROBLJENI KAMEN	GRAVEL
NABIJENA ZEMLJA	HUDDLE GROUND

REV.	Opis revizije / Revision description	Datum/Date	Crtao/Drawn	Overio/Appr.
-				
-				
01				

Broj ugovora / Contract No :12.01.12625/52-17

Konzorcium:
Consortium:

delta inženjering
www.deltainzenjering.rs

	Ime i prezime / Name	Potpis/Sign..
Odg. projektant: Respon. designer:	Mirjana Lazić dipl.inž.arh.	
Licenca odg.proj.: Res. des. license:	300 4540 03	
Vrsta teh. dok.: Project type:	IDR - Idejno rešenje IDR - Conceptual design	
Datum: Date:	25.01.2018.	Projekcija: Projection:
Deo projekta: Project part:	Projekat arhitekture Arhitectural Design	

Investitor: Client: JP ELEKTROPRIVREDA SRBIJE
PE ELEKTROPRIVREDA SERBIA

Objekat: Complex: Postrojenje za ODG za TE Nikola Tesla A
FGD Construction Project for TPP Nikola Tesla

Postrojenje: Facility: Zona apsorbera
Absorbers area

Deo postrojenja: Unit: C5-Glavna elektro-komandna zgrada
C5-FGD control/electrical building

Razmera: Scale: 1/100

Naziv crteža: Drawing name: PRESECI 1-1, 2-2
CROSS SECTIONS 1-1, 2-2

Crtež broj: Drawing number: **NTFGD-S2.5-IDR-1.0.0-C5-004D-rev00**

List/od: Page/of: **4/6**

Rev. 00

Ime fajla / File name: NTFGD-S2.5-IDR-1.0.0-C5-rev00.dwg

ZA Q.01 - Rev. 3 - 15.05.15.

FGD - KONTROLNA ZGRADA / FGD CONTROL / ELECTRICAL BUILDING
FASADE A-A,B-B / FACADES A-A,B-B

A-A

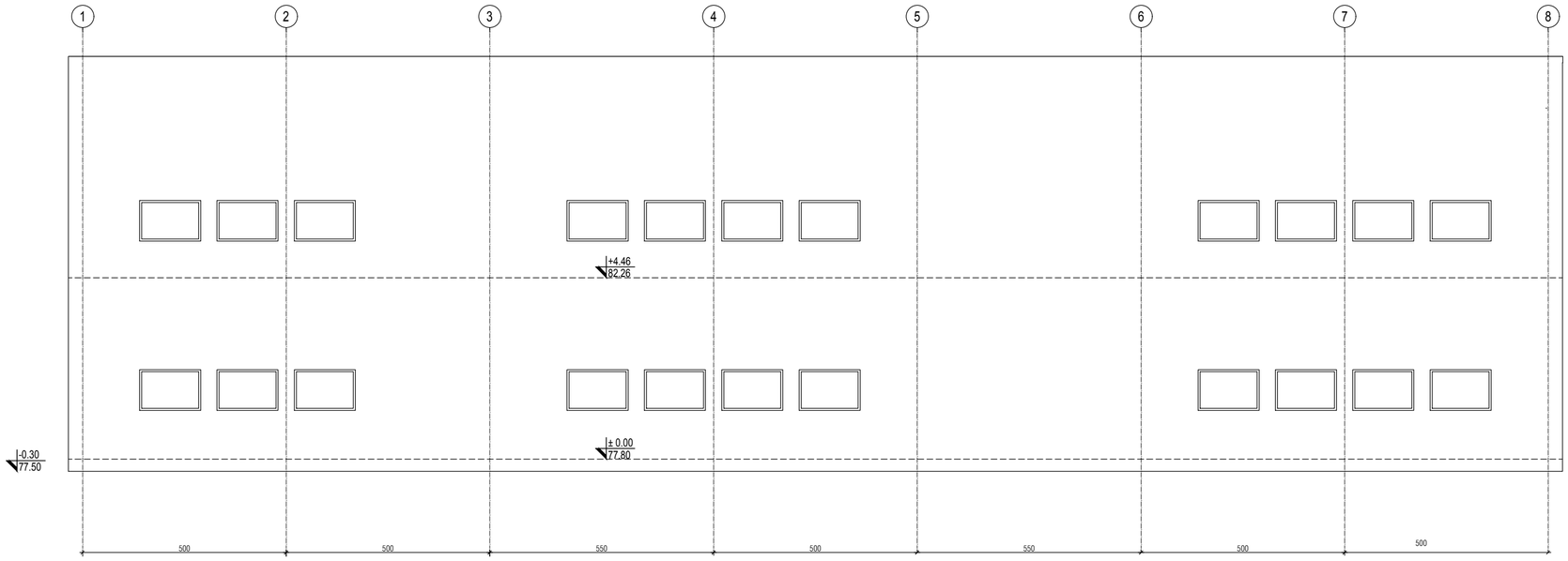

B-B

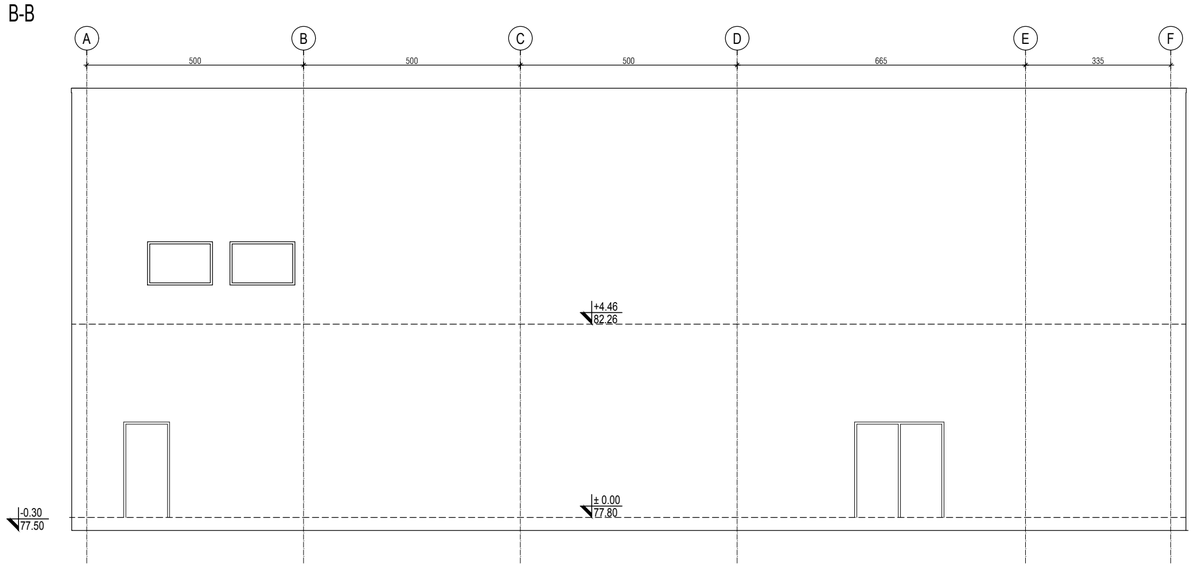

LEGENDA MATERIJALA / LEGEND:

ARMIRANI BETON	REINFORCED CONCRETE
NABIJENI BETON	LEAN CONCRETE
MRŠAVI BETON /TAMPON/	LEAN CONCRETE
GITER BLOK	CLAY BLOCK
PUNA OPEKA	BRICK BLOCK
FASADNI I KROVNI PANEL	FACADES AND ROOF PANEL
MOTAŽNI PREGRADNI ZID OD GK PLOČA	PREFABRICATED WALL PANELS
TERMOIZOLACIJA	THERMAL INSOLATION
HIDROIZOLACIJA	HYDROISOLATION
ŠLJUNAK	GRAVEL
ČELIČNA KONSTRUKCIJA	STEEL CONSTRUCTION
OLUCI	CHAMFER
DROBLJENI KAMEN	GRAVEL
NABIJENA ZEMLJA	HUDDLE GROUND

Инжењерска комора Србије
Мирјана Б. Лазић
дипл.инж.арх.
300 4540 03
Овлашћени пројектант

REV.	Opis revizije / Revision description	Datum/Date	Crtao/Drawn	Overio/Appr.
-				
-				
01				

Broj ugovora / Contract No :12.01.12625/52-17

Konzorcium:
Consortium:

MITSUBISHI HITACHI POWER SYSTEMS | ITOCHU | MITSUBISHI HITACHI POWER SYSTEMS EUROPE | Jedinstvo

delta inženjering
www.deltainzenjering.rs

	Ime i prezime / Name	Potpis/Sign.
Odg. projektant: Respon. designer:	Mirjana Lazić dipl.inž.arh.	
Licenca odg.proj.: Res. des. license:	300 4540 03	

Vrsta teh. dok.: Project type: IDR - Idejno rešenje / IDR - Conceptual design

Datum: Date: 25.01.2018. Projekcija: Projection:

Deo projekta: Project part: Projekat arhitekture / Arhitectural Design

Investitor: Client: JP ELEKTROPRIVREDA SRBIJE / PE ELEKTROPRIVREDA SERBIA

Objekat: Complex: Postrojenje za ODG za TE Nikola Tesla A / FGD Construction Project for TPP Nikola Tesla

Postrojenje: Facility: Zona apsorbera / Absorbers area

Deo postrojenja: Unit: C5-Glavna elektro-komandna zgrada / C5-FGD control/electrical building

Razmera: Scale: 1/100

Naziv crteža: Drawing name: FASADE A, B / FASADES A, B

Crtež broj: Drawing number: NTFGD-S2.5-IDR-1.0.0-C5-005D-rev00

List/od: Page/of: 5/6

Rev. 00

Ime fajla / File name: NTFGD-S2.5-IDR-1.0.0-C5-re00.dwg

ZA Q.01 - Rev. 3 - 15.05.15.

FGD - KONTROLNA ZGRADA / FGD CONTROL / ELECTRICAL BUILDING
FASADE C-C, D-D / FACADES C-C, D-D

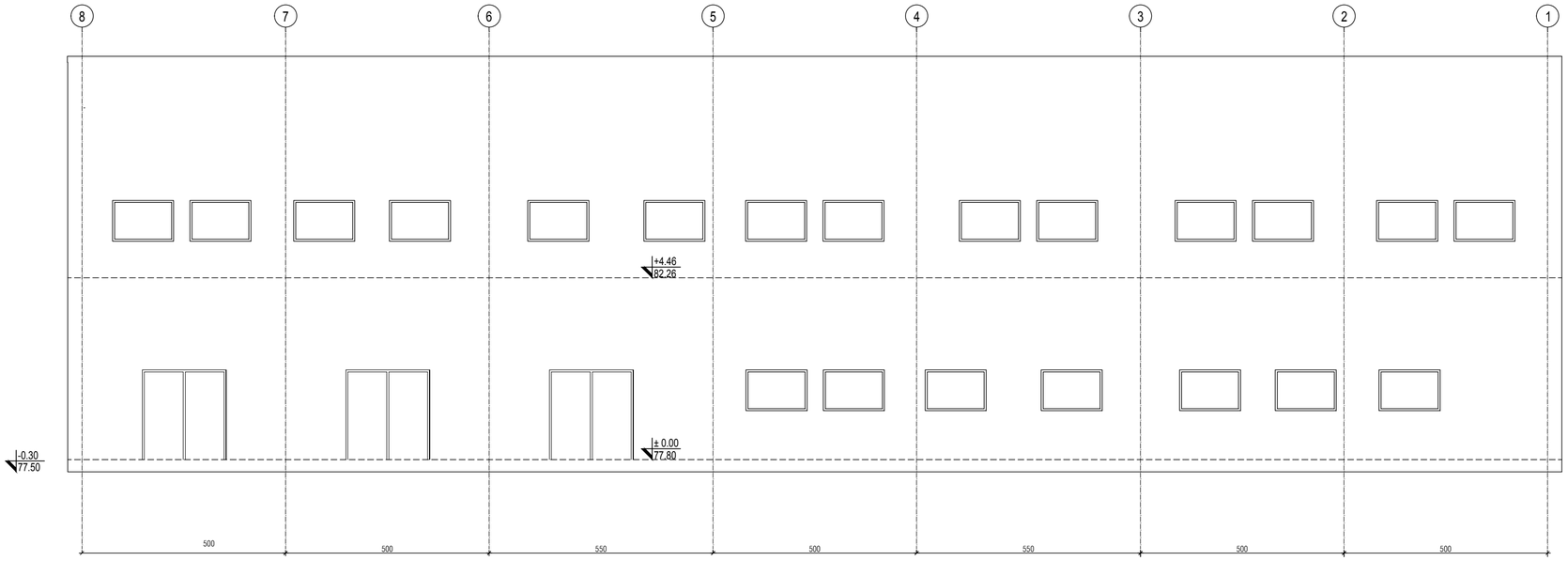

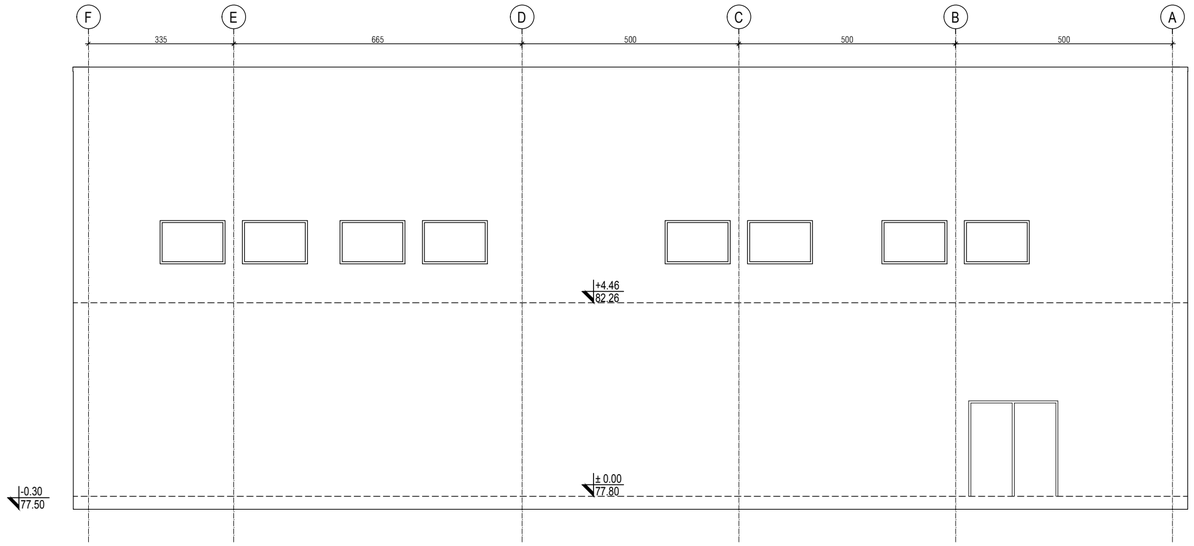

LEGENDA MATERIJALA / LEGEND:

ARMIRANI BETON	REINFORCED CONCRETE
NABIJENI BETON	LEAN CONCRETE
MRŠAVI BETON /TAMPON/	LEAN CONCRETE
GITER BLOK	CLAY BLOCK
PUNA OPEKA	BRICK BLOCK
FASADNI I KROVNI PANEL	FACADES AND ROOF PANEL
MOTAŽNI PREGRADNI ZID OD GK PLOČA	PREFABRICATED WALL PANELS
TERMOIZOLACIJA	THERMAL INSOLATION
HIDROIZOLACIJA	HYDROISOLATION
ŠLJUNAK	GRAVEL
ČELIČNA KONSTRUKCIJA	STEEL CONSTRUCTION
OLUCI	CHAMFER
DROBLJENI KAMEN	GRAVEL
NABIJENA ZEMLJA	HUDDLE GROUND

REV.	Opis revizije / Revision description	Datum/Date	Crtao/Drawn	Overio/Appr.
01				
-				
-				

Broj ugovora / Contract No :12.01.12625/52-17

Konzorcium:
Consortium:

MITSUBISHI HITACHI POWER SYSTEMS | ITOCHU | MITSUBISHI HITACHI POWER SYSTEMS EUROPE | Jedinstvo

delta inženjering
www.deltainzenjering.rs

	Ime i prezime / Name	Potpis/Sign.
Odg. projektant: Respon. designer:	Mirjana Lazić dipl.inž.arh.	
Licenca odg.proj.: Res. des. license:	300 4540 03	

Vrsta teh. dok.: Project type: IDR - Idejno rešenje / IDR - Conceptual design

Datum: Date: 25.01.2018. Projekcija: Projection:

Deo projekta: Project part: Projekat arhitekture / Arhitectural Design

Investitor: Client: JP ELEKTROPRIVREDA SRBIJE / PE ELEKTROPRIVREDA SERBIA

Objekat: Complex: Postrojenje za ODG za TE Nikola Tesla A / FGD Construction Project for TPP Nikola Tesla

Postrojenje: Facility: Zona apsorbera / Absorbers area

Deo postrojenja: Unit: C5-Glavna elektro-komandna zgrada / C5-FGD control/electrical building

Razmera: Scale: 1/100

Naziv crteža: Drawing name: FASADE C, D / FASADES C, D

Crtež broj: Drawing number: NTFGD-S2.5-IDR-1.0.0-C5-006D-rev00

List/od: Page/of: 6/6

Rev. 00

Ime fajla / File name: NTFGD-S2.5-IDR-1.0.0-C5-re00.dwg

ZA Q.01 - Rev. 3 - 15.05.15.

OSNOVE ETAŽA / FLOOR PLANS

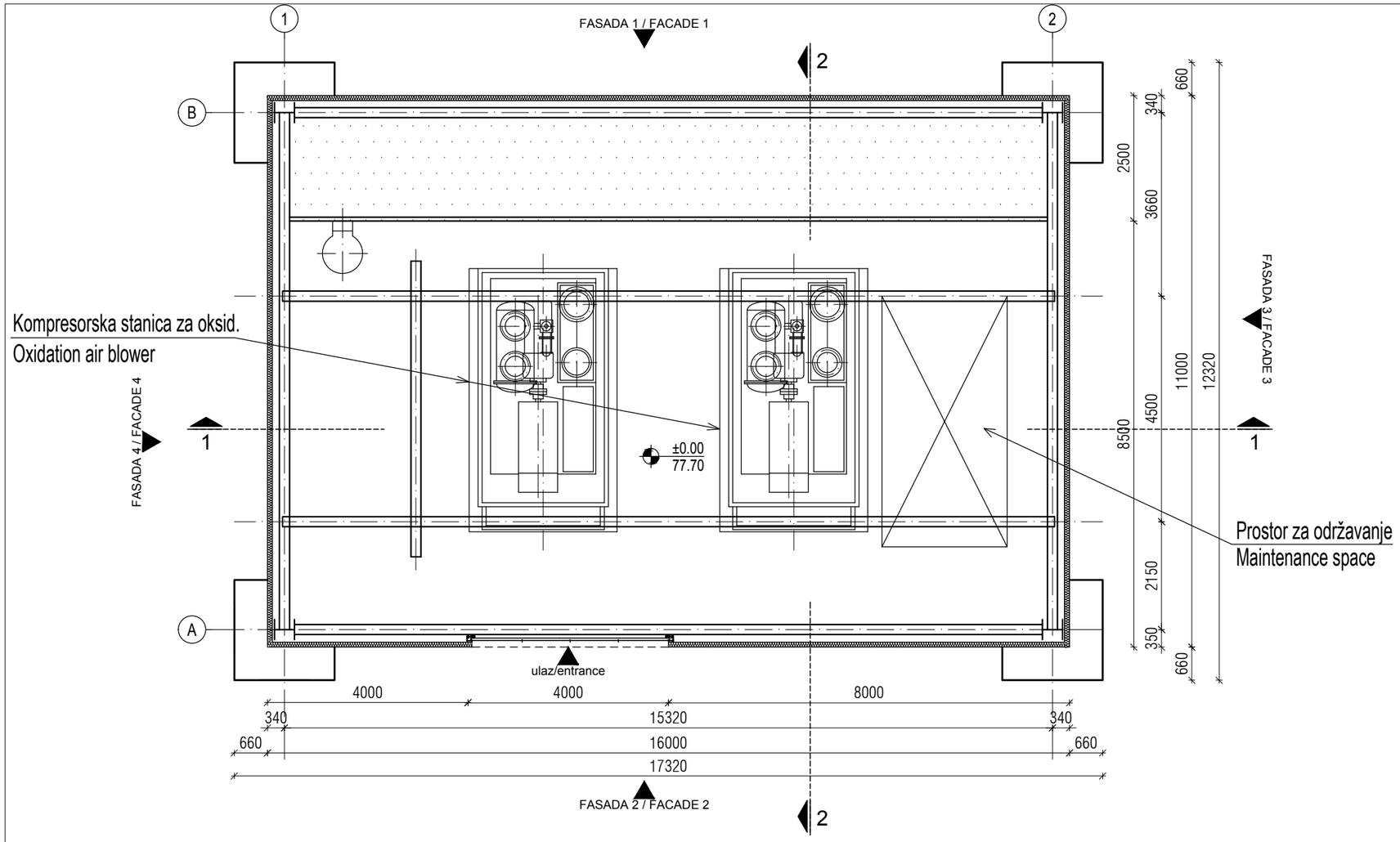

broj / No.	NAMENA PROSTORIJA / ROOMS	površina / area (m²)	obim / perimeter (m')
OSNOVA OBJEKTA /GROUND FLOOR ±0.00			
Kompresorska stanica za oksidaciju / Oxidation air blower C6-A1			
1	Prostor za kompresorsku stanicu / Space for oxidation air blower	170.64	53.20
2	Platforma na koti +4.5/ Platform level +4.5	35.08	35.56
2	Platforma na koti +7.0/ Platform level +7.0	35.08	35.56
2	Platforma na koti +8.0/ Platform level +8.0	35.08	35.56
	UKUPNO / TOTAL:	275.88	159.88
NETO POVRŠINA OSNOVE / NETO AREA GROUND FLOOR:		275.88	
BRUTO POVRŠINA OSNOVE / BRUTO AREA GROUND FLOOR:		176.00	
BRUTO POVRŠINA OSNOVE SA TEMELJIMA / BRUTO AREA GROUND FLOOR WITH FOUNDATION:		184.96	
BRGP / GBA:		290.20	
POVRŠINA HORIZONTALNE PROJEKCIJE KROVA / AREA HORIZONTAL PROJECTIONS OF THE ROOF:		186.97	

LEGENDA MATERIJALA / LEGEND:

ARMIRANI BETON	REINFORCED CONCRETE
NABIJENI BETON	LEAN CONCRETE
MRŠAVI BETON /TAMPON/	LEAN CONCRETE
GITER BLOK	CLAY BLOCK
PUNA OPEKA	BRICK BLOCK
FASADNI I KROVNI PANEL	FACADES AND ROOF PANEL
MOTAŽNI PREGRADNI ZID OD GK PLOČA	PREFABRICATED WALL PANELS
TERMOIZOLACIJA	THERMAL INSOLATION
HIDROIZOLACIJA	HYDROISOLATION
ŠLJUNAK	GRAVEL
ČELIČNA KONSTRUKCIJA	STEEL CONSTRUCTION
OLUCI	CHAMFER
DROBLJENI KAMEN	GRAVEL
NABIJENA ZEMLJA	HUDDLE GROUND

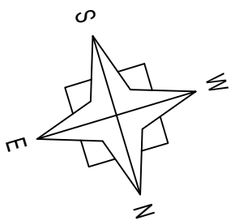

ИНЖЕЊЕРСКА КОМОРА СРБИЈЕ
Мирјана Б. Лазић
дипл.инж.арх.
300 4540 03
ОДГОВОРНИ ПРОЈЕКТАНТ

REV.	Opis revizije / Revision description	Datum/Date	Crtao/Drawn	Overio/Appr.
-				
-				
01				

Broj ugovora / Contract No :12.01.12625/52-17

Konzorcium:
Consortium:

MITSUBISHI HITACHI POWER SYSTEMS | ITOCHU | MITSUBISHI HITACHI POWER SYSTEMS EUROPE | Jedinstvo

delta inženjering
www.deltainzenjering.rs

	Ime i prezime / Name	Paraf/Sign.
Odg. projektant: Respon. designer:	Mirjana Lazić dipl.inž.arh.	
Licenca odg.proj.: Res. des. license:	300 4540 03	

Vrsta teh. dok.: Project type: IDR - Idejno rešenje / IDR - Conceptual design

Datum: Date: 25.01.2018. Projekcija: Projection:

Deo projekta: Project part: Projekat arhitekture / Arhitectural Design

Investitor: Client: JP ELEKTROPRIVREDA SRBIJE / PE ELEKTROPRIVREDA SERBIA

Objekat: Complex: Postrojenje za ODG za TE Nikola Tesla A / FGD Construction Project for TPP Nikola Tesla

Postrojenje: Facility: Zona apsorbera / Absorbers area

Deo postrojenja: Unit: C6-1HTD-Zgrada duvaljki 1HTD / C6-1HTD-Oxidation air blower building

Razmera: Scale: 1/100

Naziv crteža: Drawing name: OSNOVE ETAŽA / FLOOR PLANS

Crtež broj: Drawing number: NTFGD-S2.1-IDR-1.0.0-C6-1HTD-001D-rev00

List/od: Page/of: 1/4

Rev. 00

Ime fajla / File name: NTFGD-S2.1-IDR-1.0.0-C6-1HTD-001D-rev00.dwg

ZA.Q.01 - Rev. 3 - 15.05.15.

OSNOVA KROVNIH RAVNI
ROOF PLAN

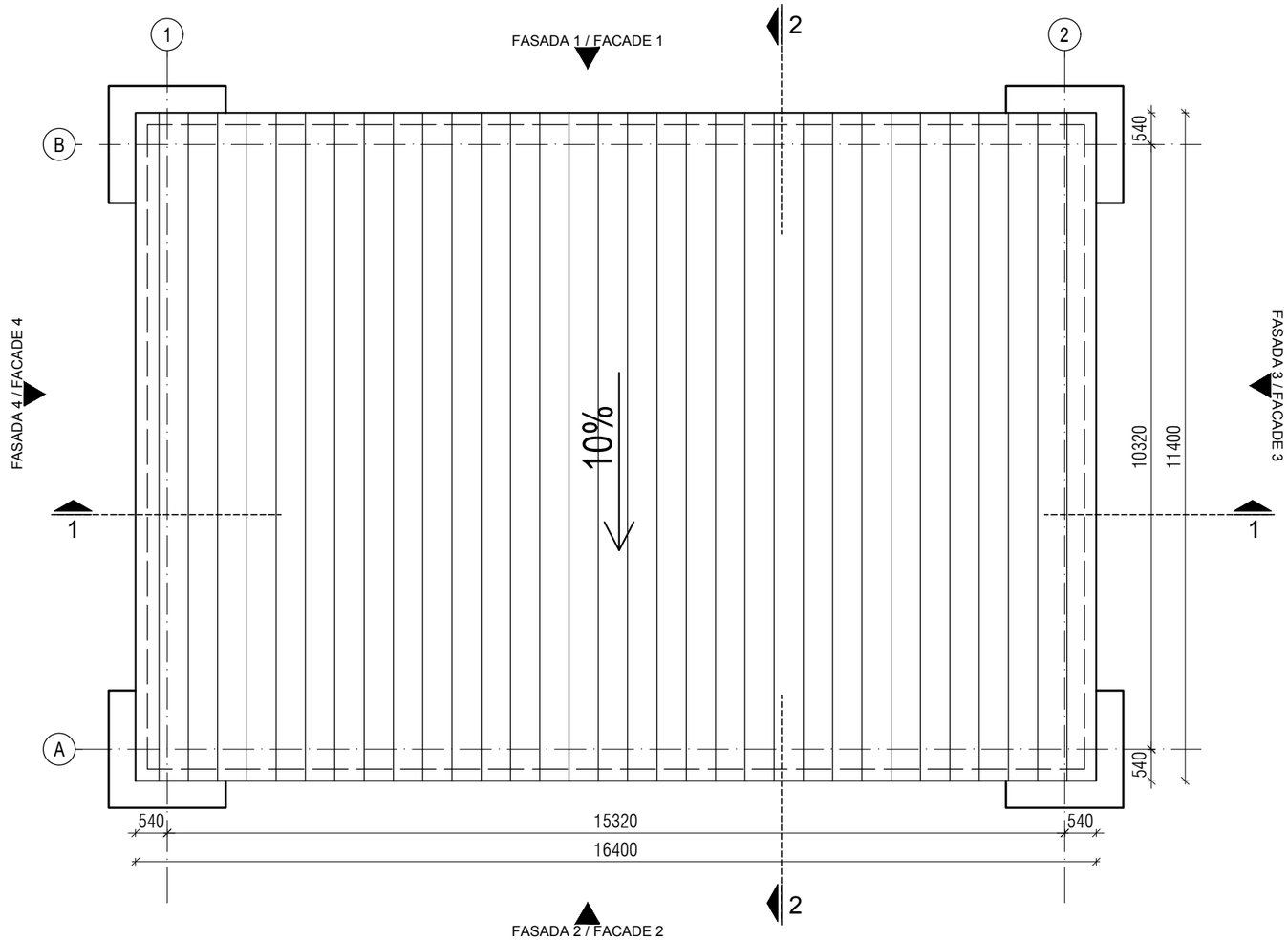

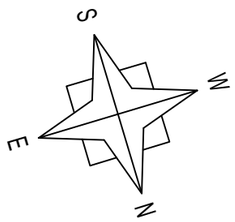

LEGENDA MATERIJALA / LEGEND:

ARMIRANI BETON	REINFORCED CONCRETE
NABIJENI BETON	LEAN CONCRETE
MRŠAVI BETON /TAMPON/	LEAN CONCRETE
GITER BLOK	CLAY BLOCK
PUNA OPEKA	BRICK BLOCK
FASADNI I KROVNI PANEL	FACADES AND ROOF PANEL
MOTAŽNI PREGRADNI ZID OD GK PLOČA	PREFABRICATED WALL PANELS
TERMOIZOLACIJA	THERMAL INSOLATION
HIDROIZOLACIJA	HYDROISOLATION
ŠLJUNAK	GRAVEL
ČELIČNA KONSTRUKCIJA	STEEL CONSTRUCTION
OLUCI	CHAMFER
DROBLJENI KAMEN	GRAVEL
NABIJENA ZEMLJA	HUDDLE GROUND

REV.	Opis revizije / Revision description	Datum/Date	Crtao/Drawn	Overio/Appr.
-				
-				
01				

Broj ugovora / Contract No :12.01.12625/52-17

Konzorcium:
Consortium:

MITSUBISHI HITACHI POWER SYSTEMS · ITOCHU · MITSUBISHI HITACHI POWER SYSTEMS EUROPE · Jedinstvo

delta inženjering
www.deltainzenjering.rs

	Ime i prezime / Name	Paraf/Sign.
Odg. projektant: Respon. designer:	Mirjana Lazić dipl.inž.arh.	
Licenca odg.proj.: Res. des. license:	300 4540 03	

Vrsta teh. dok.: Project type: IDR - Idejno rešenje / IDR - Conceptual design

Datum: Date: 25.01.2018. Projekcija: Projection:

Deo projekta: Project part: Projekat arhitekture / Arhitectural Design

Investitor: Client: JP ELEKTROPRIVREDA SRBIJE / PE ELEKTROPRIVREDA SERBIA

Objekat: Complex: Postrojenje za ODG za TE Nikola Tesla A / FGD Construction Project for TPP Nikola Tesla

Postrojenje: Facility: Zona apsorbera / Absorbers area

Deo postrojenja: Unit: C6-1HTD-Zgrada duvaljki 1HTD / C6-1HTD-Oxidation air blower building

Razmera: Scale: 1/100

Naziv crteža: Drawing name: OSNOVA KROVNIH RAVNI / ROOF PLAN

Crtež broj: Drawing number: NTFGD-S2.1-IDR-1.0.0-C6-1HTD-002D-rev00

List/od: Page/of: 2/4

Rev. 00

Inženjerska komora Srbije – Ovlašćeni projektant – Мирјана Б. Лазић, дипл.инж.арх. 300 4540 03

Ime fajla / File name: NTFGD-S2.1-IDR-1.0.0-C6-1HTD-001D-rev00.dwg

ZA.Q.01 - Rev. 3 - 15.05.15.

PRESEK 2-2 / CROSS SECTION 2-2

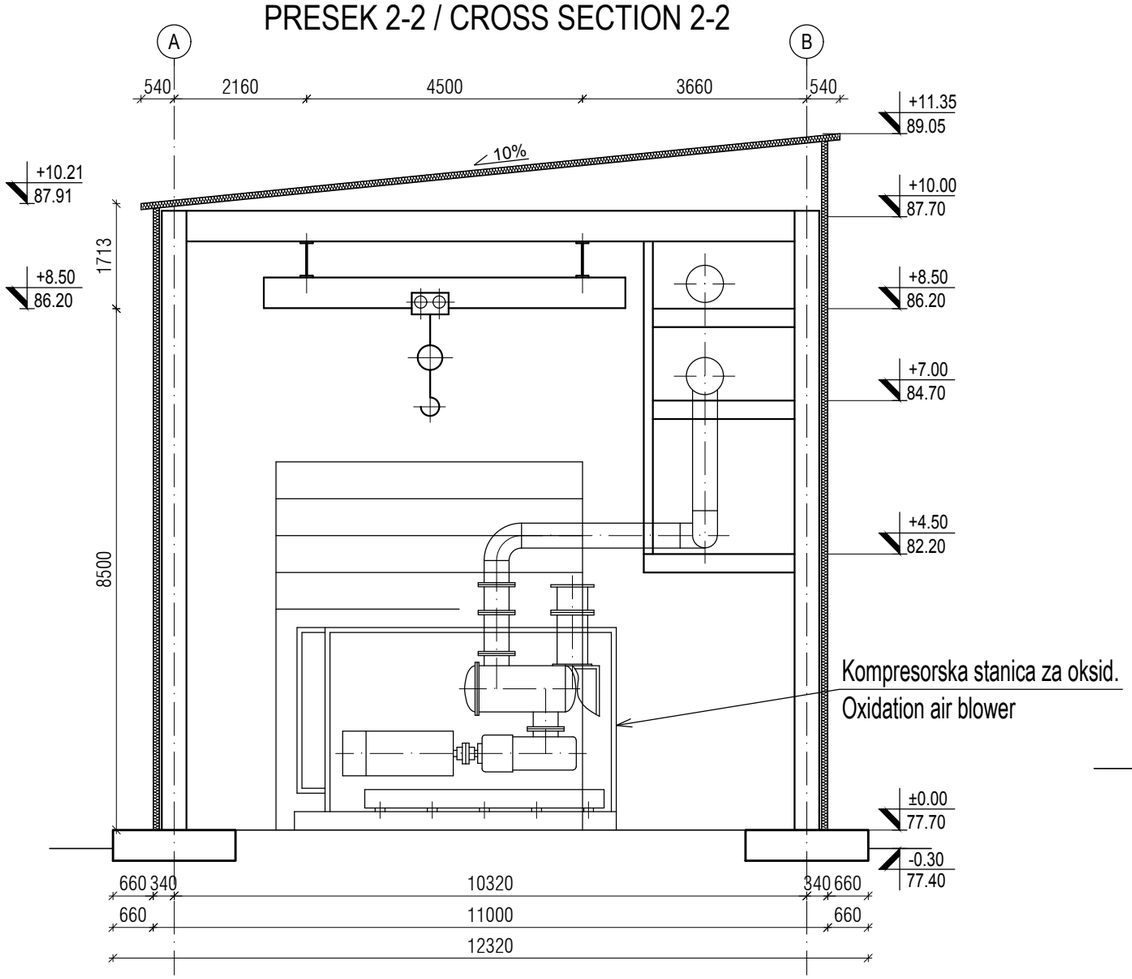

PRESEK 1-21 / CROSS SECTION 1-1

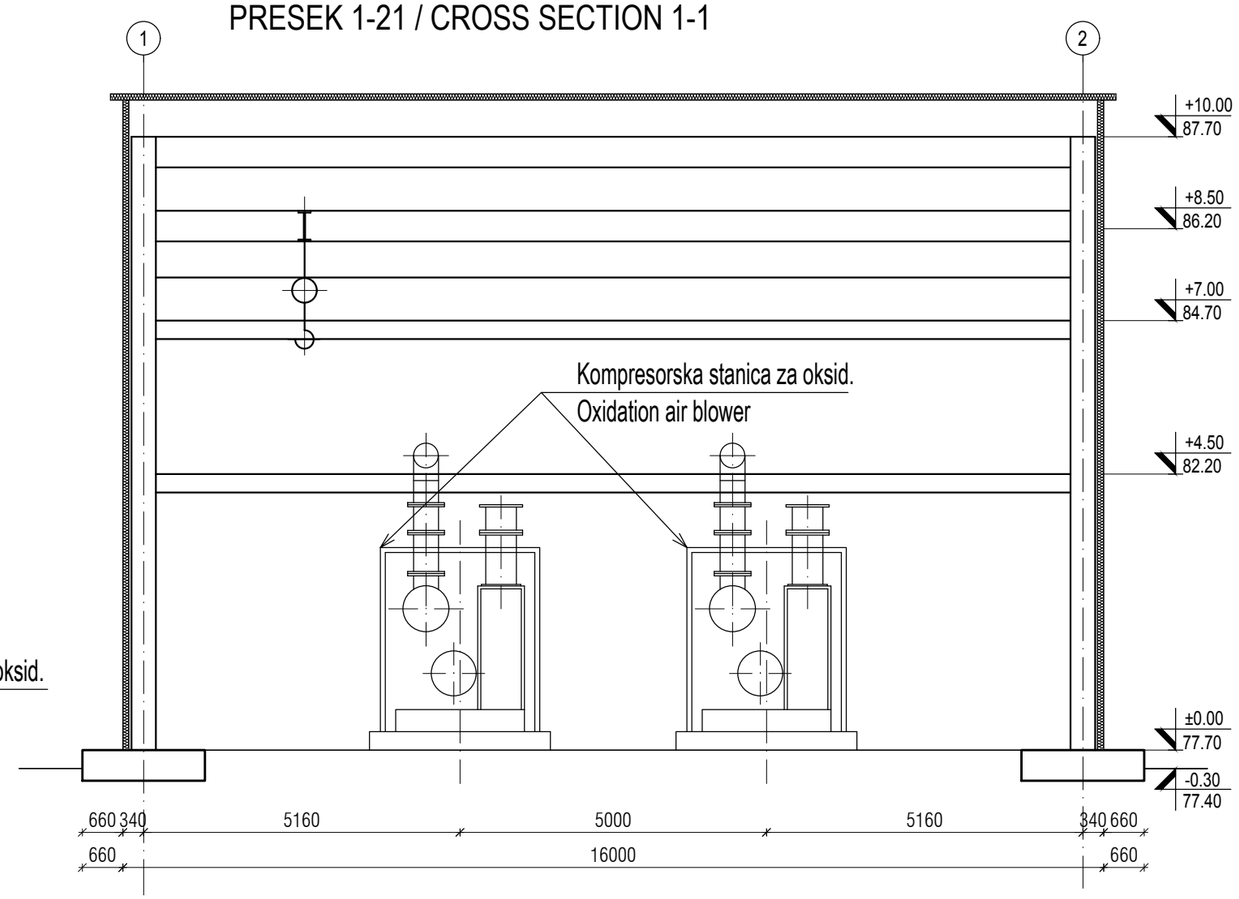

LEGENDA MATERIJALA / LEGEND:

ARMIRANI BETON	REINFORCED CONCRETE
NABIJENI BETON	LEAN CONCRETE
MRŠAVI BETON /TAMPON/	LEAN CONCRETE
GITER BLOK	CLAY BLOCK
PUNA OPEKA	BRICK BLOCK
FASADNI I KROVNI PANEL	FACADES AND ROOF PANEL
MOTAŽNI PREGRADNI ZID OD GK PLOČA	PREFABRICATED WALL PANELS
TERMOIZOLACIJA	THERMAL INSOLATION
HIDROIZOLACIJA	HYDROISOLATION
ŠLJUNAK	GRAVEL
ČELIČNA KONSTRUKCIJA	STEEL CONSTRUCTION
OLUCI	CHAMFER
DROBLJENI KAMEN	GRAVEL
NABIJENA ZEMLJA	HUDDLE GROUND

REV.	Opis revizije / Revision description	Datum/Date	Crtao/Drawn	Overio/Appr.
-				
-				
01				

Broj ugovora / Contract No :12.01.12625/52-17

Konzorcium:
Consortium:

MITSUBISHI HITACHI POWER SYSTEMS · ITOCHU · MITSUBISHI HITACHI POWER SYSTEMS EUROPE · Jedinstvo

delta inženjering
www.deltainzenjering.rs

	Ime i prezime / Name	Paraf/Sign.
Odg. projektant: Respon. designer:	Mirjana Lazić dipl.inž.arh.	
Licenca odg.proj.: Res. des. license:	300 4540 03	

Vrsta teh. dok.: Project type: IDR - Idejno rešenje / IDR - Conceptual design

Datum: Date: 25.01.2018. Projekcija: Projection:

Deo projekta: Project part: Projekat arhitekture / Arhitectural Design

Investitor: Client: JP ELEKTROPRIVREDA SRBIJE / PE ELEKTROPRIVREDA SERBIA

Objekat: Complex: Postrojenje za ODG za TE Nikola Tesla A / FGD Construction Project for TPP Nikola Tesla

Postrojenje: Facility: Zona apsorbera / Absorbers area

Deo postrojenja: Unit: C6-1HTD-Zgrada duvaljki 1HTD / C6-1HTD-Oxidation air blower building

Razmera: Scale: 1/100

Naziv crteža: Drawing name: PRESECI / CROSS SECTIONS

Crtež broj: Drawing number: NTFGD-S2.1-IDR-1.0.0-C6-1HTD-003D-rev00

List/od: Page/of: 3/4

Rev. 00

ИНЖЕЊЕРСКА КОМОРА СРБИЈЕ · ОВЛАШЋЕНИ ПРОЈЕКТАНТ · Мирјана Б. Лазић дипл.инж.арх. 300 4540 03

Ime fajla / File name: NTFGD-S2.1-IDR-1.0.0-C6-1HTD-001D-rev00.dwg

ZA.Q.01 - Rev. 3 - 15.05.15.

FASADA 1 / FACADE 1

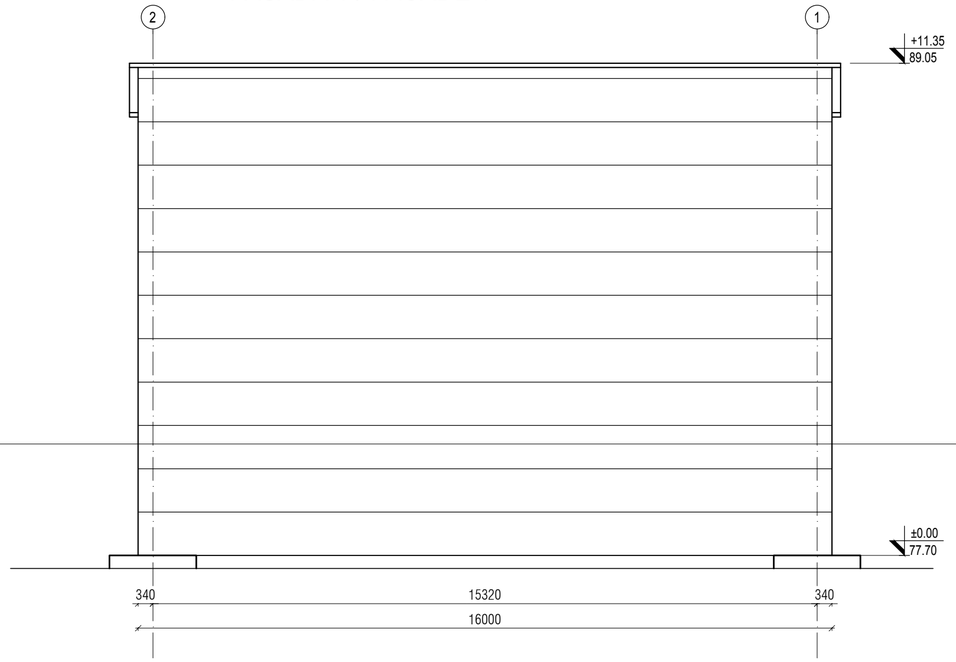

FASADA 2 / FACADE 2

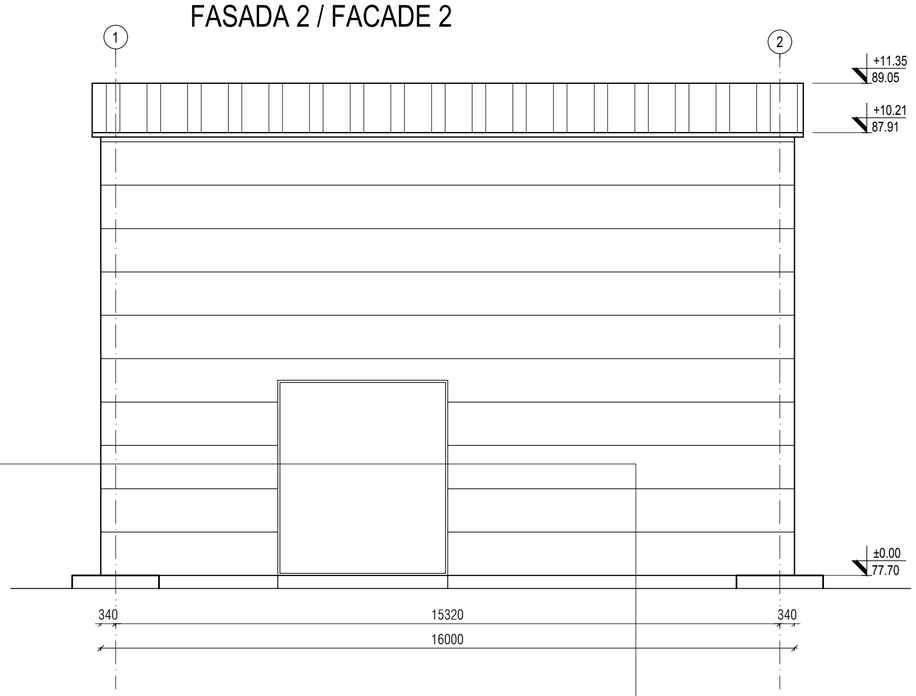

FASADA 3 / FACADE 3

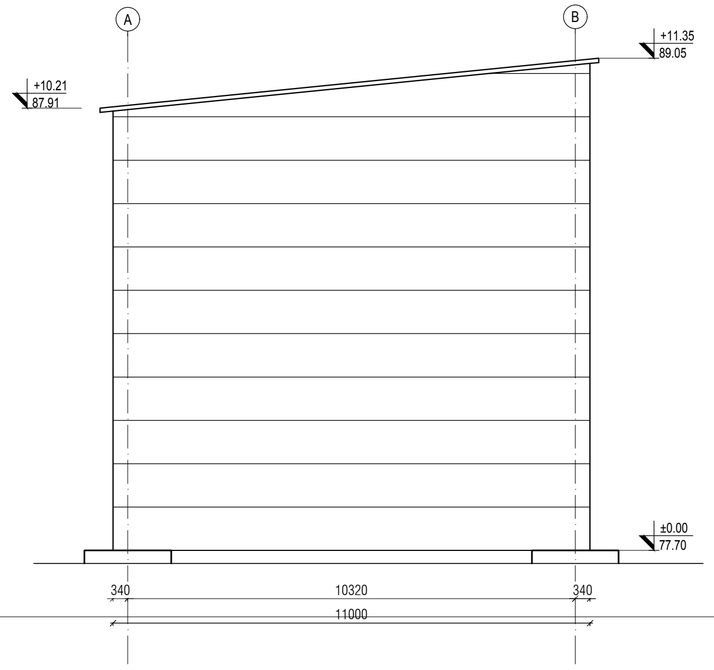

FASADA 4 / FACADE 4

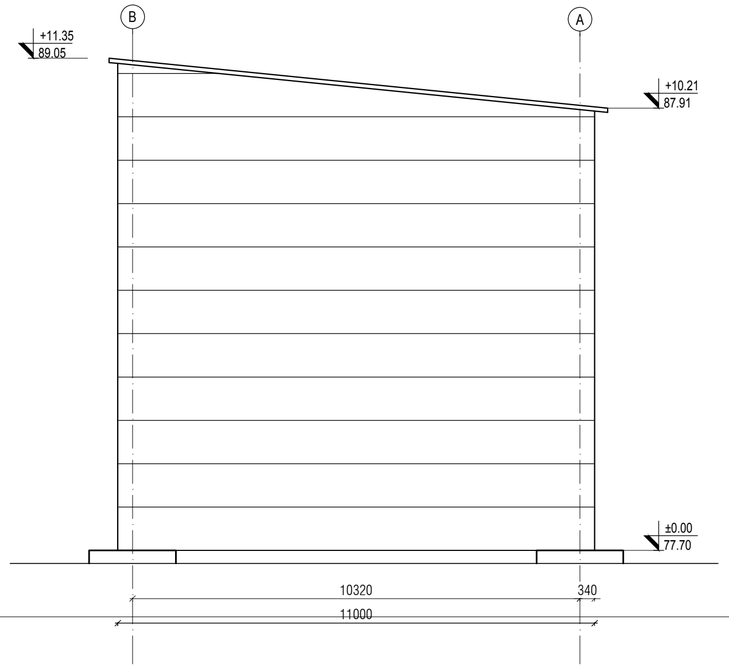

REV.	Opis revizije / Revision description	Datum/Date	Crtao/Drawn	Overio/Appr.
1.				
2.				
01				

Broj ugovora / Contract No :12.01.12625/52-17

Konzorcium: Consortium: MITSUBISHI HITACHI POWER SYSTEMS; ITOCHU; MITSUBISHI HITACHI POWER SYSTEMS EUROPE; Jedinstvo

delta inženjering
www.deltainzenjering.rs

	Ime i prezime / Name	Potpis/Sign.
Odg. projektant: Respon. designer:	Mirjana Lazić dipl.inž.arh.	
Licenca odg.proj.: Res. des. license:	300 4540 03	

Vrsta teh. dok.: Project type: IDR - Idejno rešenje / IDR - Conceptual design

Datum: Date: 25.01.2018. Projekcija: Projection:

Deo projekta: Project part: Projekat arhitekture / Arhitectural Design

Investitor: Client: JP ELEKTROPRIVREDA SRBIJE / PE ELEKTROPRIVREDA SERBIA

Objekat: Complex: Postrojenje za ODG za TE Nikola Tesla A / FGD Construction Project for TPP Nikola Tesla

Postrojenje: Facility: Zona apsorbera / Absorbers area

Deo postrojenja: Unit: C6-1HTD-Zgrada duvaljki 1HTD / C6-1HTD-Oxidation air blower building

Razmera: Scale: 1/100

Naziv crteža: Drawing name: FASADE / FACADES

Crtež broj: Drawing number: NTFGD-S2.1-IDR-1.0.0-C6-1HTD-004D-rev00

List/od: Page/of: 4/4

Rev. 00

Mirjana B. Lazić dipl.inž.arh. 300 4540 03

Ime fajla / File name: NTFGD-S2.1-IDR-1.0.0-C6-1HTD-004D-rev00.dwg

ZA Q.01 - Rev. 3 - 15.05.15.

OSNOVA OBJEKTA
GROUND FLOOR PLAN /

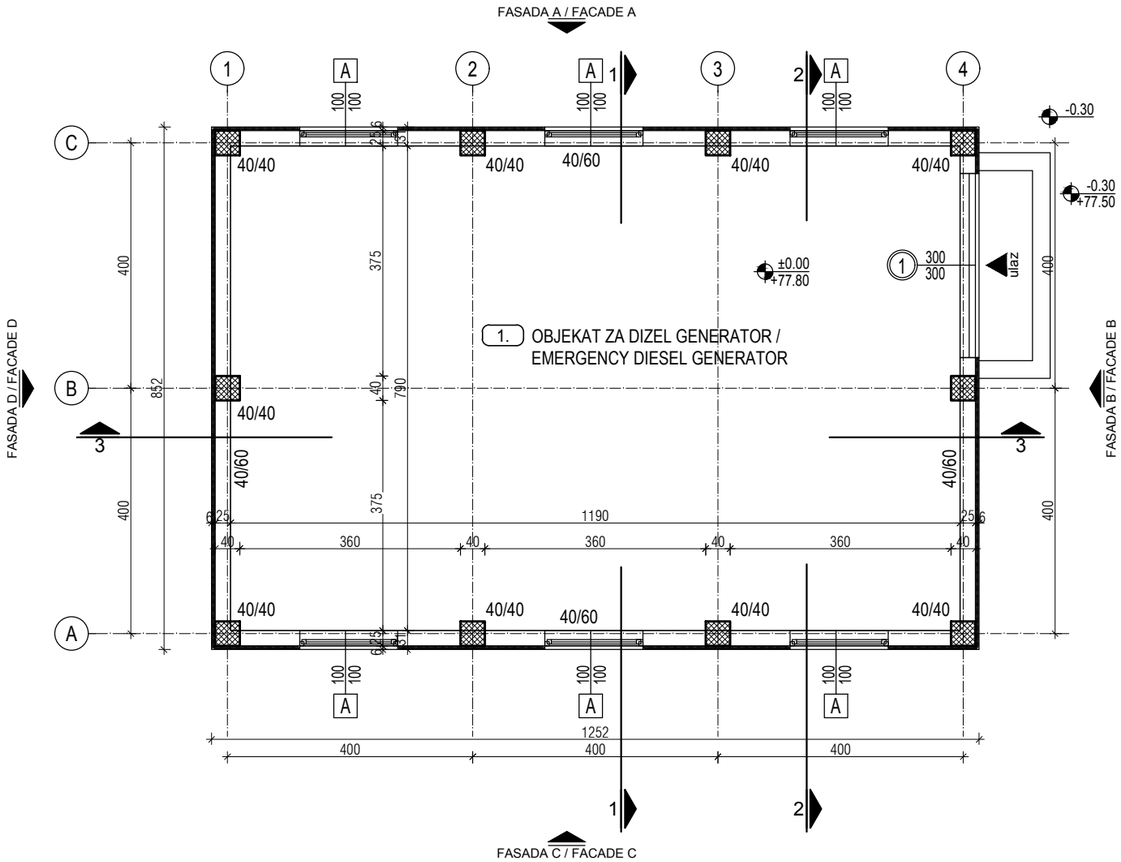

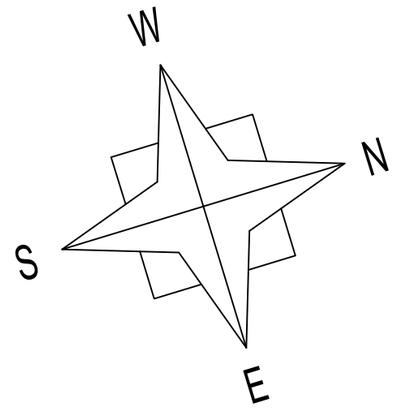

broj / No.	NAMENA PROSTORIJA / ROOMS	površina / area (m²)	obim / perimeter (m')
OSNOVA PRIZEMLJA /GROUND FLOOR ±0.00			
OBJEKAT ZA DIZEL GENERATOR / EMERGENCY DIESEL GENERATOR BUILDING			
1	OBJEKAT ZA DIZEL GENERATOR / EMERGENCY DIESEL GENERATOR	93,56	41,40
	UKUPNO / TOTAL:	93,56	41,40
	NETO POVRŠINA PRIZEMLJA / NETO AREA GROUND FLOOR:	93,56	
	BRUTO POVRŠINA PRIZEMLJA / BRUTO AREA GROUND FLOOR:	106,67	
	BRGP / GBA:	106,67	
	POVRŠINA HORIZONTALNE PROJEKCIJE KROVA / AREA HORIZONTAL PROJECTIONS OF THE ROOF:	107,51	

LEGENDA MATERIJALA: / LEGEND:

ARMIRANI BETON	REINFORCED CONCRETE
NABIJENI BETON	LEAN CONCRETE
MRŠAVI BETON /TAMPON/	LEAN CONCRETE
GITER BLOK	CLAY BLOCK
PUNA OPEKA	BRICK BLOCK
FASADNI I KROVNI PANEL	FACADES AND ROOF PANEL
MOTAŽNI PREGRADNI ZID OD GK PLOČA	PREFABRICATED WALL PANELS
TERMOIZOLACIJA	THERMAL INSOLATION
HIDROIZOLACIJA	HYDROISOLATION
ŠLJUNAK	GRAVEL
ČELIČNA KONSTRUKCIJA	STEEL CONSTRUCTION
OLUCI	CHAMFER
DROBLJENI KAMEN	GRAVEL
NABIJENA ZEMLJA	HUDDLE GROUND

INŽENJERSKA KOMORA SRBIJE
Мирјана Б. Лазић
дипл.инж.арх.
300 4540 03
ОДГОВОРНИ ПРОЈЕКТАНТ

REV.	Opis revizije / Revision description	Datum/Date	Crtao/Drawn	Overio/Appr.
-				
-				
01	Promena visine objekta / Changed object dimensions	25.01.2018.	I. Ilić, inž.arh.	

Broj ugovora / Contract No :12.01.12625/52-17

Konzorcium:
Consortium:

MITSUBISHI HITACHI POWER SYSTEMS · ITOCHU · MITSUBISHI HITACHI POWER SYSTEMS EUROPE · Jedinstvo

delta inženjering
www.deltainzenjering.rs

	Ime i prezime / Name	Paraf/Sign.
Odg. projektant: Respon. designer:	Mirjana Lazić dipl.inž.arh.	
Licenca odg.proj.: Res. des. license:	300 4540 03	

Vrsta teh. dok.: / Project type: IDR - Idejno rešenje / IDR - Conceptual design

Datum: / Date: 25.01.2018. Projekcija: / Projection:

Deo projekta: / Project part: Projekat arhitekture / Arhitectural Design

Investitor: / Client: JP ELEKTROPRIVREDA SRBIJE / PE ELEKTROPRIVREDA SERBIA

Objekat: / Complex: Postrojenje za ODG za TE Nikola Tesla A / FGD Construction Project for TPP Nikola Tesla

Postrojenje: / Facility: Zona apsorbera / Absorbers area

Deo postrojenja: / Unit: C7-Zgrada dizel agregata / C7-Emergency disel generator

Razmera: / Scale: 1/100

Naziv crteža: / Drawing name: OSNOVA PRIZEMLJA / GROUND FLOOR PLAN

Crtež broj: / Drawing number: NTFGD-S2.5-IDR-1.0.0-C7-001D-rev00

List/od: / Page/of: 1/5

Rev. 01

ZA Q.01 - Rev. 3 - 15.05.15.

Ime fajla / File name: NTFGD-S2.5-IDR-1.0.0-C7-rev00.dwg

POGLED NA TAVANICU /
CEILING PLAN

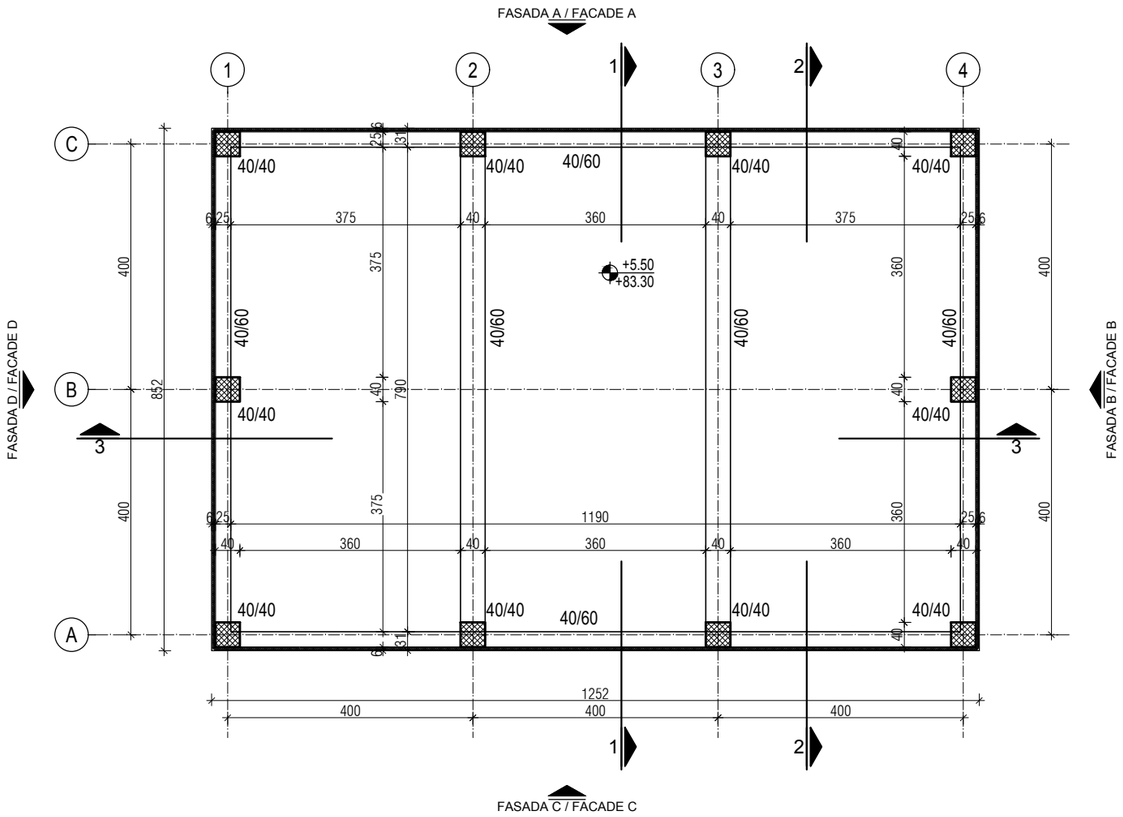

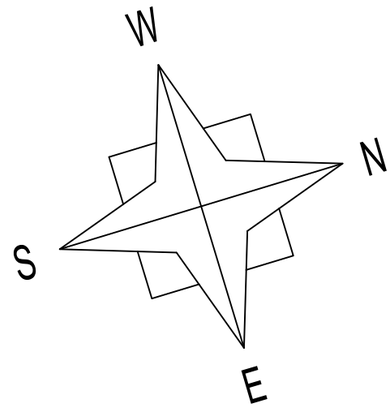

LEGENDA MATERIJALA: LEGEND:

ARMIRANI BETON	REINFORCED CONCRETE
NABIJENI BETON	LEAN CONCRETE
MRŠAVI BETON /TAMPON/	LEAN CONCRETE
GITER BLOK	CLAY BLOCK
PUNA OPEKA	BRICK BLOCK
FASADNI I KROVNI PANEL	FACADES AND ROOF PANEL
MOTAŽNI PREGRADNI ZID OD GK PLOČA	PREFABRICATED WALL PANELS
TERMOIZOLACIJA	THERMAL INSOLATION
HIDROIZOLACIJA	HYDROISOLATION
ŠLJUNAK	GRAVEL
ČELIČNA KONSTRUKCIJA	STEEL CONSTRUCTION
OLUCI	CHAMFER
DROBLJENI KAMEN	GRAVEL
NABIJENA ZEMLJA	HUDDLE GROUND

INŽENJERSKA KOMORA SRBIJE
Мирјана Б. Лазић
дипл.инж.арх.
300 4540 03
ОВЛАШЋЕНИ ПРОЈЕКТАНТ

REV.	Opis revizije / Revision description	Datum/Date	Crtao/Drawn	Overio/Appr.
-				
-				
01	Promena visine objekta / Changed object dimensions	25.01.2018.	I. Ilić, inž.arh.	

Broj ugovora / Contract No :12.01.12625/52-17

Konzorcium:
Consortium:

MITSUBISHI HITACHI POWER SYSTEMS · ITOCHU · MITSUBISHI HITACHI POWER SYSTEMS EUROPE · Jedinstvo

delta inženjering
www.deltainzenjering.rs

	Ime i prezime / Name	Paraf/Sign.
Odg. projektant: Respon. designer:	Mirjana Lazić dipl.inž.arh.	
Licenca odg.proj.: Res. des. license:	300 4540 03	
Vrsta teh. dok.: Project type:	IDR - Idejno rešenje IDR - Conceptual design	
Datum: Date:	25.01.2018.	Projekcija: Projection:
Deo projekta: Project part:	Projekat arhitekture Arhitectural Design	

Investitor: Client: JP ELEKTROPRIVREDA SRBIJE / PE ELEKTROPRIVREDA SERBIA

Objekat: Complex: Postrojenje za ODG za TE Nikola Tesla A
FGD Construction Project for TPP Nikola Tesla

Postrojenje: Facility: Zona apsorbera
Absorbers area

Deo postrojenja: Unit: C7-Zgrada dizel agregata
C7-Emergency disel generator

Razmera: Scale: **1/100**

Naziv crteža: Drawing name: POGLED NA TAVANICU
CEILING PLAN

Crtež broj: Drawing number: **NTFGD-S2.5-IDR-1.0.0-C7-002D-rev00**

List/od: Page/of: **2/5**

Rev. 01

Ime fajla / File name: NTFGD-S2.5-IDR-1.0.0-C7-rev00.dwg

ZA.Q.01 - Rev. 3 - 15.05.15.

KROVNE RAVNI /
ROOF PLAN

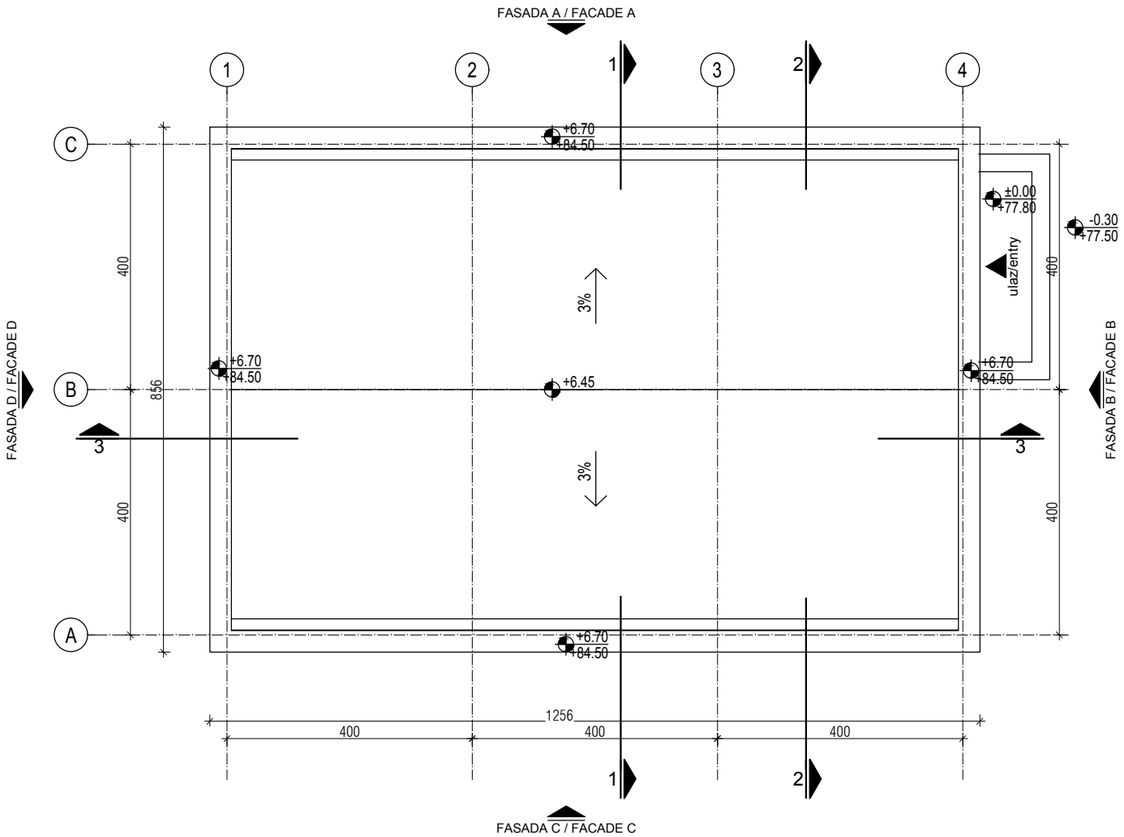

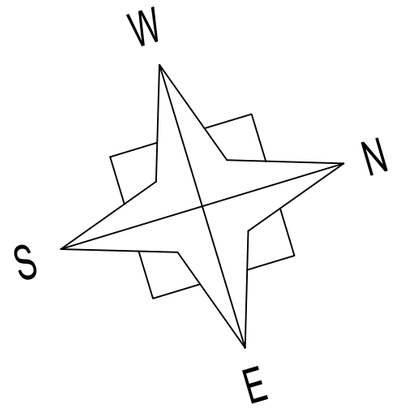

broj / No.	NAMENA PROSTORIJA / ROOMS	površina / area (m²)	obim / perimeter (m')
OSNOVA PRIZEMLJA /GROUND FLOOR ±0.00			
OBJEKAT ZA DIZEL GENERATOR / EMERGENCY DIESEL GENERATOR BUILDING			
1	OBJEKAT ZA DIZEL GENERATOR / EMERGENCY DIESEL GENERATOR	93,56	41,40
	UKUPNO / TOTAL:	93,56	41,40
	NETO POVRŠINA PRIZEMLJA / NETO AREA GROUND FLOOR:	93,56	
	BRUTO POVRŠINA PRIZEMLJA / BRUTO AREA GROUND FLOOR:	106,67	
	BRGP / GBA:	106,67	
	POVRŠINA HORIZONTALNE PROJEKCIJE KROVA / AREA HORIZONTAL PROJECTIONS OF THE ROOF:	107,51	

LEGENDA MATERIJALA: LEGEND:

ARMIRANI BETON	REINFORCED CONCRETE
NABIJENI BETON	LEAN CONCRETE
MRŠAVI BETON /TAMPON/	LEAN CONCRETE
GITER BLOK	CLAY BLOCK
PUNA OPEKA	BRICK BLOCK
FASADNI I KROVNI PANEL	FACADES AND ROOF PANEL
MOTAŽNI PREGRADNI ZID OD GK PLOČA	PREFABRICATED WALL PANELS
TERMOIZOLACIJA	THERMAL INSOLATION
HIDROIZOLACIJA	HYDROISOLATION
ŠLJUNAK	GRAVEL
ČELIČNA KONSTRUKCIJA	STEEL CONSTRUCTION
OLUCI	CHAMFER
DROBLJENI KAMEN	GRAVEL
NABIJENA ZEMLJA	HUDDLE GROUND

ИНЖЕЊЕРСКА КОМОРА СРБИЈЕ
Мирјана Б. Лазић
дипл.инж.арх.
300 4540 03
ОВЛАШЋЕНИ ПРОЈЕКТАНТ

REV.	Opis revizije / Revision description	Datum/Date	Crtao/Drawn	Overio/Appr.
-				
-				
01	Promena visine objekta / Changed object dimensions	25.01.2018.	I. Ilić, inž.arh.	

Broj ugovora / Contract No :12.01.12625/52-17

Konzorcium:
Consortium:

MITSUBISHI HITACH POWER SYSTEMS · ITOCHU · MITSUBISHI HITACH POWER SYSTEMS EUROPE · Jedinstvo

delta inženjering
www.deltainzenjering.rs

	Ime i prezime / Name	Paraf/Sign.
Odg. projektant: Respon. designer:	Mirjana Lazić dipl.inž.arh.	
Licenca odg.proj.: Res. des. license:	300 4540 03	

Vrsta teh. dok.: Project type: IDR - Idejno rešenje / IDR - Conceptual design

Datum: Date: 25.01.2018. Projekcija: Projection:

Deo projekta: Project part: Projekat arhitekture / Arhitectural Design

Investitor: Client: JP ELEKTROPRIVREDA SRBIJE / PE ELEKTROPRIVREDA SERBIA

Objekat: Complex: Postrojenje za ODG za TE Nikola Tesla A / FGD Construction Project for TPP Nikola Tesla

Postrojenje: Facility: Zona apsorbera / Absorbers area

Deo postrojenja: Unit: C7-Zgrada dizel agregata / C7-Emergency disel generator

Razmera: Scale: **1/100**

Naziv crteža: Drawing name: OSNOVA KROVNIH RAVNI / ROOF PLAN

Crtež broj: Drawing number: **NTFGD-S2.5-IDR-1.0.0-C7-003D-rev00**

List/od: Page/of: **3/5**

Rev. 01

Ime fajla / File name: NTFGD-S2.5-IDR-1.0.0-C7-rev00.dwg

ZA.Q.01 - Rev. 3 - 15.05.15.

PRESECI 1-1, 2-2, 3-3 /
SECTION 1-1, 2-2, 3-3

POPREČNI PRESEK 1-1
CROSS SECTION 1-1 /

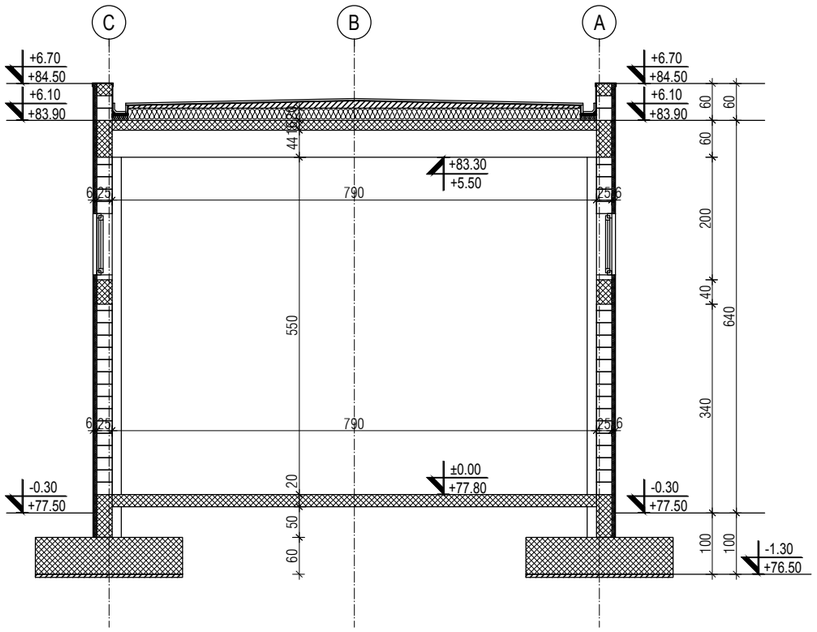

POPREČNI PRESEK 2-2
CROSS SECTION 2-2 /

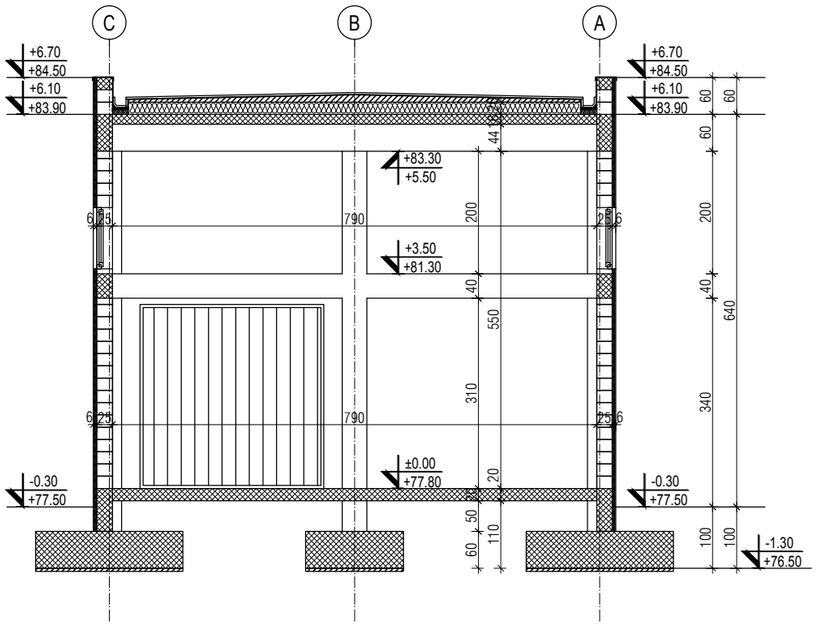

LEGENDA MATERIJALA: / LEGEND:

ARMIRANI BETON	REINFORCED CONCRETE
NABIJENI BETON	LEAN CONCRETE
MRŠAVI BETON /TAMPON/	LEAN CONCRETE
GITER BLOK	CLAY BLOCK
PUNA OPEKA	BRICK BLOCK
FASADNI I KROVNI PANEL	FACADES AND ROOF PANEL
MOTAŽNI PREGRADNI ZID OD GK PLOČA	PREFABRICATED WALL PANELS
TERMOIZOLACIJA	THERMAL INSOLATION
HIDROIZOLACIJA	HYDROISOLATION
ŠLJUNAK	GRAVEL
ČELIČNA KONSTRUKCIJA	STEEL CONSTRUCTION
OLUCI	CHAMFER
DROBLJENI KAMEN	GRAVEL
NABIJENA ZEMLJA	HUDDLE GROUND

PRESEK 3-3/
SECTION 3-3

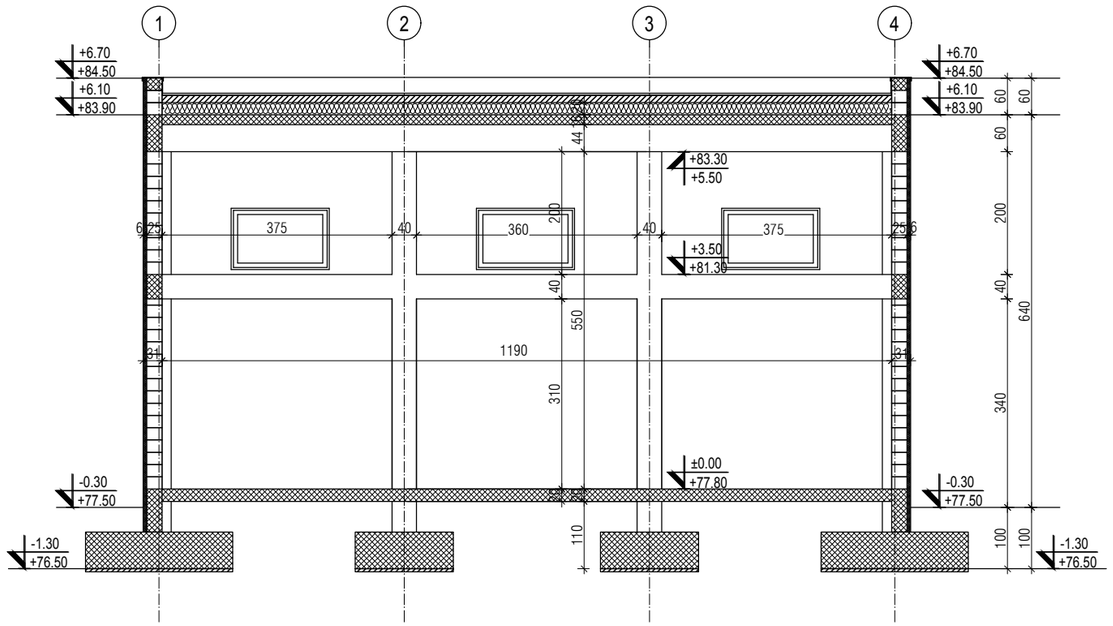

REV.	Opis revizije / Revision description	Datum/Date	Crtao/Drawn	Overio/Appr.
-				
-				
01	Promena visine objekta / Changed object dimensions	25.01.2018.	I. Ilić, inž.arh.	

Broj ugovora / Contract No :12.01.12625/52-17

Konzorcium:
Consortium:

delta inženjering
www.deltainzenjering.rs

	Ime i prezime / Name	Paraf/Sign.
Odg. projektant: Respon. designer:	Mirjana Lazić dipl.inž.arh.	
Licenca odg.proj.: Res. des. license:	300 4540 03	
Vrsta teh. dok.: Project type:	IDR - Idejno rešenje / IDR - Conceptual design	
Datum: Date:	25.01.2018.	Projekcija: Projection:
Deo projekta: Project part:	Projekat arhitekture / Arhitectural Design	

Investitor: Client: JP ELEKTROPRIVREDA SRBIJE / PE ELEKTROPRIVREDA SERBIA

Objekat: Complex: Postrojenje za ODG za TE Nikola Tesla A / FGD Construction Project for TPP Nikola Tesla

Postrojenje: Facility: Zona apsorbera / Absorbers area

Deo postrojenja: Unit: C7-Zgrada dizel agregata / C7-Emergency disel generator

Razmera: Scale: **1/100**

Naziv crteža: Drawing name: PRESECI 1-1, 2-2, 3-3 / CROSS SECTION 1-1, 2-2, 3-3

Crtež broj: Drawing number: **NTFGD-S2.5-IDR-1.0.0-C7-004D-rev00**

List/od: Page/of: **4/5**

Rev. 01

Инжењерска комора Србије
Мирјана Б. Лазић
дипл.инж.арх.
300 4540 03
Овлашћени пројектант

Ime fajla / File name: NTFGD-S2.5-IDR-1.0.0-C7-rev00.dwg

ZA.Q.01 - Rev. 3 - 15.05.15.

IZGLED D / FACADE D

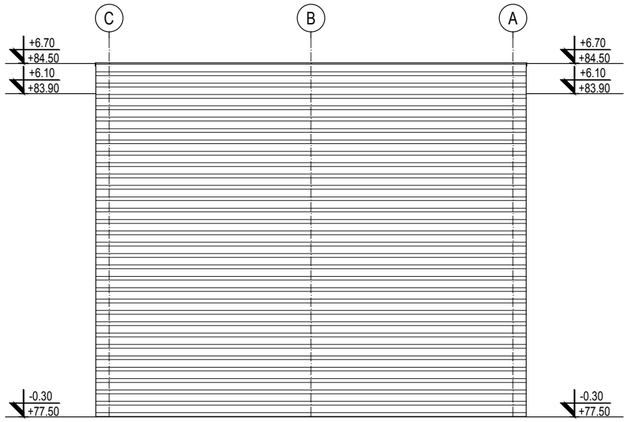

IZGLED B / FACADE B

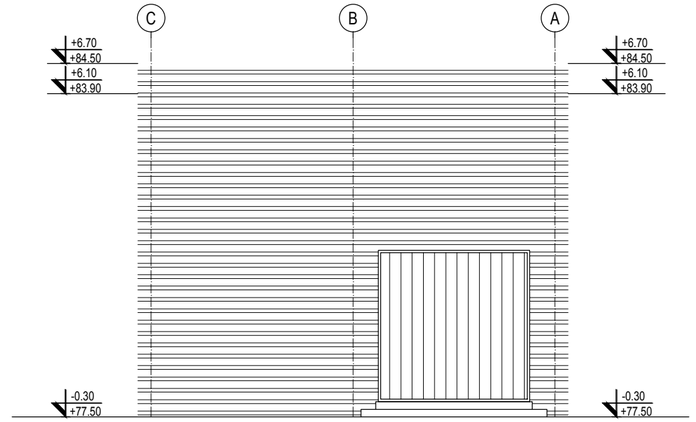

IZGLED C / FACADE C

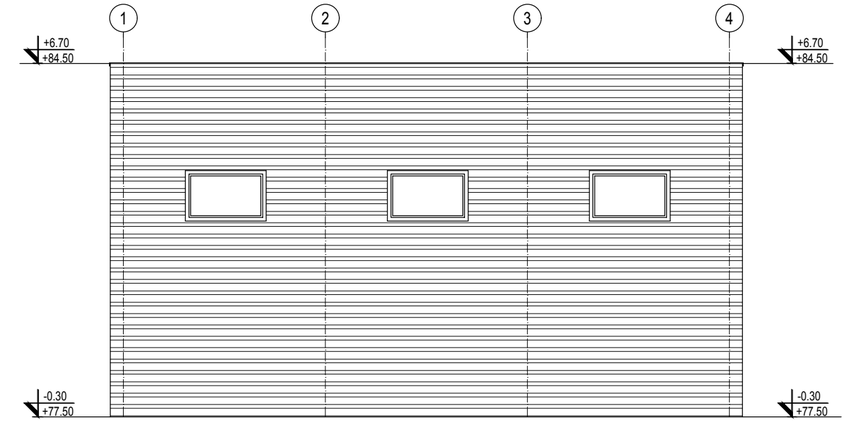

IZGLED A / FACADE A

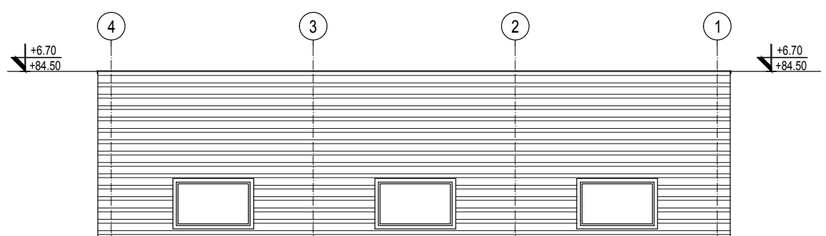

REV.	Opis revizije / Revision description	Datum/Date	Crtao/Drawn	Overio/Appr.
-				
-				
01				

Broj ugovora / Contract No :12.01.12625/52-17

Konzorcium:
Consortium:

MITSUBISHI HITACHI POWER SYSTEMS | ITOCHU | MITSUBISHI HITACHI POWER SYSTEMS EUROPE | Jedinstvo

delta inženjering
www.deltainzenjering.rs

	Ime i prezime / Name	Paraf/Sign.
Odg. projektant: Respon. designer:	Mirjana Lazić dipl.inž.arh.	
Licenca odg.proj.: Res. des. license:	300 4540 03	

Vrsta teh. dok.: Project type: IDR - Idejno rešenje / IDR - Conceptual design

Datum: Date: 25.01.2018.

Projekcija: Projection:

Deo projekta: Project part: Projekat arhitekture / Arhitectural Design

Investitor: Client: JP ELEKTROPRIVREDA SRBIJE / PE ELEKTROPRIVREDA SERBIA

Objekat: Complex: Postrojenje za ODG za TE Nikola Tesla A / FGD Construction Project for TPP Nikola Tesla

Postrojenje: Facility: Zona apsorbera / Absorbers area

Deo postrojenja: Unit: C7-Zgrada dizel agregata / C7-Emergency disel generator

Razmera: Scale: 1/100

Naziv crteža: Drawing name: FASADE / FACADES

Crtež broj: Drawing number: NTFGD-S2.5-IDR-1.0.0-C7-005D-rev00

List/od: Page/of: 5/5

Rev. 00

ZA Q.01 - Rev. 3 - 15.05.15

Ime fajla / File name: NTFGD-S2.5-IDR-1.0.0-C7-rev00.dwg

A1- DRENAŽNA JAMA ABSORBERA - PLAN OPLATE ODVODNE JAME /
A1- ABSORBER AREA DRAIN PIT- FORMWORK PLAN OF DRAIN PIT

A2- DRENAŽNA JAMA ABSORBERA - PLAN OPLATE DRENAŽNE JAME /
A2- ABSORBER AREA DRAIN PIT- FORMWORK PLAN OF DRAIN PIT

C10-A1, C10-A2 - ABSORBER AREA DRAIN PIT- FORMWORK PLAN OF DRAIN PIT /
C10-A1, C10-A2 - DRENAŽNA JAMA ABSORBERA - PLAN OPLATE DRENAŽNE JAME ABSORBERA

PLAN KROVA A1 / ROOF PLAN A1

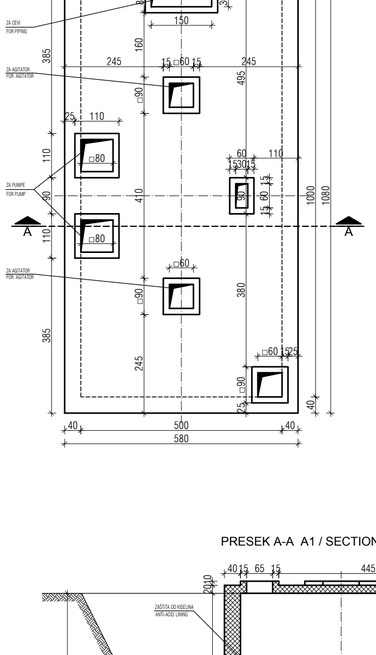

OSNOVA OBJEKTA A1 / FLOOR PLAN A1

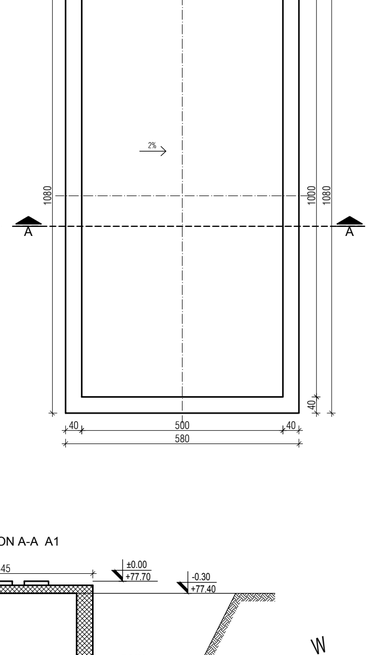

PLAN KROVA A2 / ROOF PLAN A2

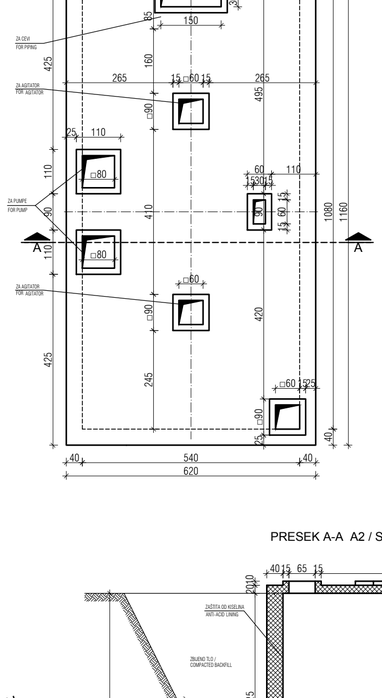

OSNOVA OBJEKTA A2 / FLOOR PLAN A2

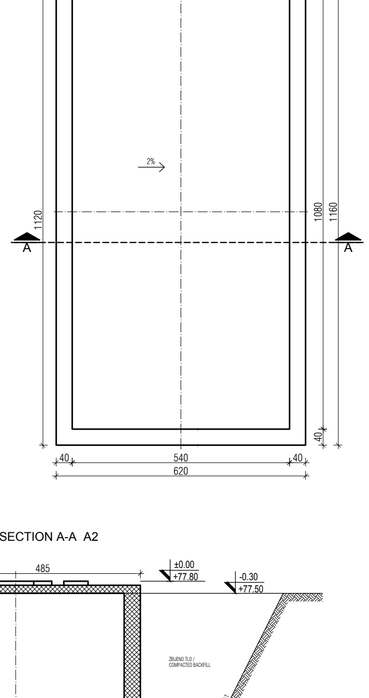

LEGENDA MATERIJALA: / LEGEND:

ARMIRANI BETON	REINFORCED CONCRETE
NABIJENI BETON	LEAN CONCRETE
MRŠAVI BETON /TAMPON/	LEAN CONCRETE
GITER BLOK	CLAY BLOCK
PUNA OPEKA	BRICK BLOCK
FASADNI I KROVNI PANEL	FACADES AND ROOF PANEL
MOTAŽNI PREGRADNI ZID OD GK PLOČA	PREFABRICATED WALL PANELS
TERMOIZOLACIJA	THERMAL INSOLATION
HIDROIZOLACIJA	HYDROISOLATION
ŠLJUNAK	GRAVEL
ČELIČNA KONSTRUKCIJA	STEEL CONSTRUCTION
OLUCI	CHAMFER
DROBLJENI KAMEN	GRAVEL
NABIJENA ZEMLJA	HUDDLE GROUND

broj / No.	NAMENA PROSTORIJA / ROOMS	površina / area (m²)	obim / perimeter (m')
OSNOVA OBJEKTA /GROUND FLOOR -5,70			
DRENAŽNA JAMA ABSORBERA A1/ ABSORBER AREA DRAIN PIT A1			
1	Odvodna jama absorbera / Absorber Area Drain Pit	50.00	30.00
	UKUPNO / TOTAL:	50.00	30.00
	NETO POVRŠINA PRIZEMLJA / NETO AREA GROUND FLOOR:	50.00	
	BRUTO POVRŠINA PRIZEMLJA / BRUTO AREA GROUND FLOOR:	62.64	
	BRGP / GBA:	62.64	
	POVRŠINA HORIZONTALNE PROJEKCIJE KROVA / AREA HORIZONTAL PROJECTIONS OF THE ROOF:	62.64	

broj / No.	NAMENA PROSTORIJA / ROOMS	površina / area (m²)	obim / perimeter (m')
OSNOVA OBJEKTA /GROUND FLOOR -5,70			
DRENAŽNA JAMA ABSORBERA A2/ ABSORBER AREA DRAIN PIT A2			
1	Odvodna jama absorbera / Absorber Area Drain Pit	50.00	30.00
	UKUPNO / TOTAL:	50.00	30.00
	NETO POVRŠINA PRIZEMLJA / NETO AREA GROUND FLOOR:	50.00	
	BRUTO POVRŠINA PRIZEMLJA / BRUTO AREA GROUND FLOOR:	62.64	
	BRGP / GBA:	62.64	
	POVRŠINA HORIZONTALNE PROJEKCIJE KROVA / AREA HORIZONTAL PROJECTIONS OF THE ROOF:	62.64	

PRESEK A-A A1 / SECTION A-A A1

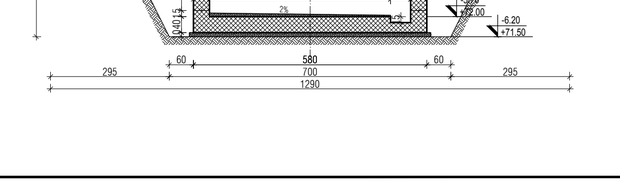

PRESEK A-A A2 / SECTION A-A A2

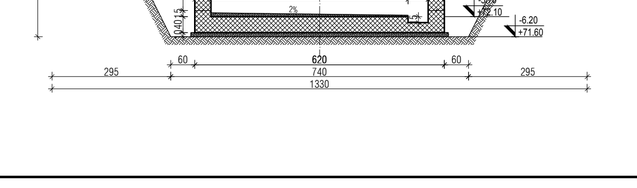

REV.	Opis revizije / Revision description	Datum/Date	Crtao/Drawn	Overio/Appr.
00				

Broj ugovora / Contract No :12.01.12625/52-17

Konzorcium:
Consortium:

MITSUBISHI HITACHI POWER SYSTEMS · ITOCHU · MITSUBISHI HITACHI POWER SYSTEMS EUROPE · Jedinstvo

delta inženjering
www.deltainzenjering.rs

	Ime i prezime / Name	Paraf/Sign.
Odg. projektant: Respon. designer:	Mirjana Lazić dipl.inž.arh.	
Licenca odg.proj.: Res. des. license:	300 4540 03	
Vrsta teh. dok.: Project type:	IDR - Idejno rešenje IDR - Conceptual design	
Datum: Date:	25.01.2018.	Projekcija: Projection:
Deo projekta: Project part:	Projekat arhitekture Arhitectural Design	

Investitor: Client: ЕЛЕКТРОПРИВРЕДА СРБИЈЕ — JP ELEKTROPRIVREDA SRBIJE / PE ELEKTROPRIVREDA SERBIA

Objekat: Complex: Postrojenje za ODG za TE Nikola Tesla A / FGD Construction Project for TPP Nikola Tesla

Postrojenje: Facility: Zona apsorbera / Absorbers area

Deo postrojenja: Unit: C10-1HTD_2HTD-Drenažna jama 1HTD i 2HTD / C10-1HTD_2HTD-Absorber drain pit

Razmera: Scale: **1/100**

Naziv crteža: Drawing name: PLAN OPLATE DRENAŽNIH JAMA / FORMWORK PLAN OF DRAIN PIT

Crtež broj: Drawing number: **NTFGD-S0.0-IDR-1.0.0-C10-1HTD_2HTD-001D-rev00**

List/od: Page/of: **1/1**

Rev. 00

ИНЖЕЊЕРСКА КОМОРА СРБИЈЕ
Мирјана Б. Лазић
дипл.инж.арх.
300 4540 03
ОВЛАШЋЕНИ ПРОЈЕКТАНТ

Ime fajla / File name: NTFGD-S0.0-IDR-1.0.0-C10-1HTD_2HTD-001D-rev00.dwg

ZA.Q.01 - Rev. 3 - 15.05.15.

Raspored prostorija rezervoara za odlaganje gipsa
Arrangement of Gypsum Slurry Disposal System Tank Area

OSNOVA PRIZEMLJA / GROUND FLOOR PLAN

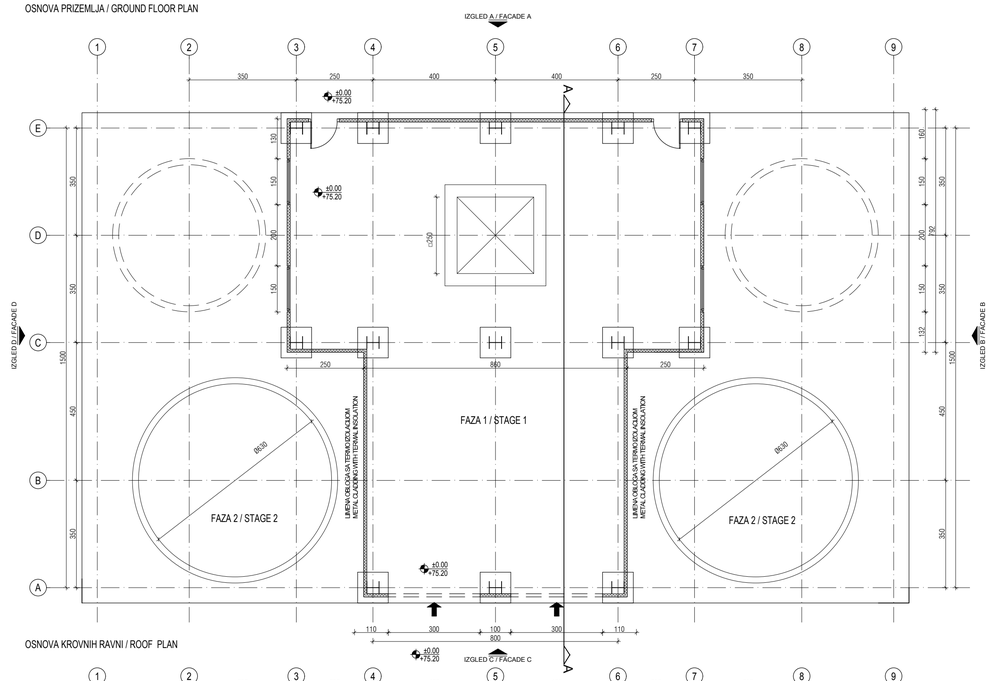

OSNOVA KROVNIH RAVNI / ROOF PLAN

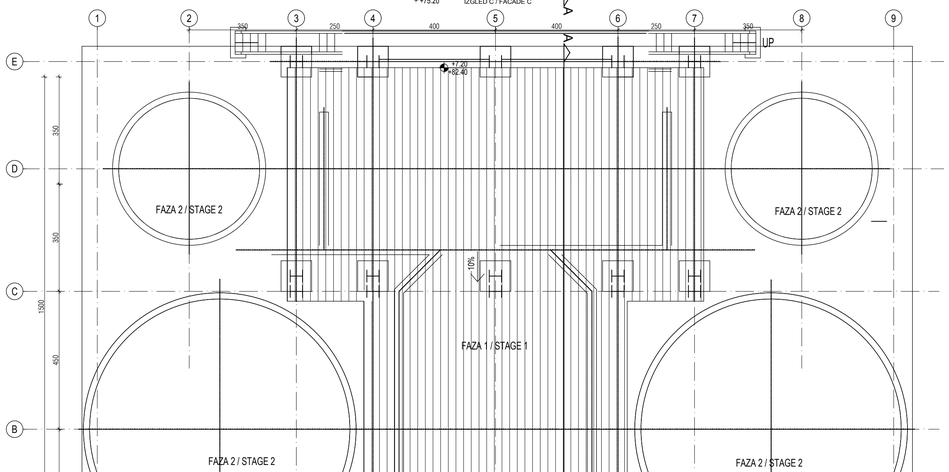

POPREČNI PRESEK A-A / CROSS SECTION A-A

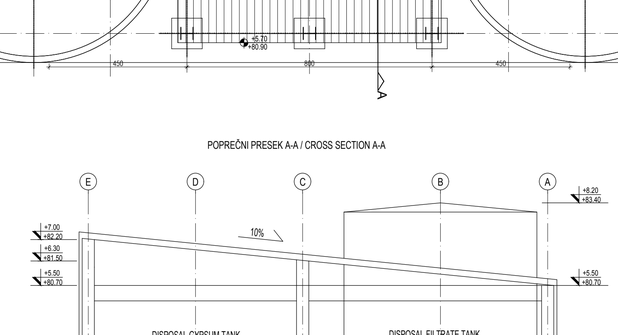

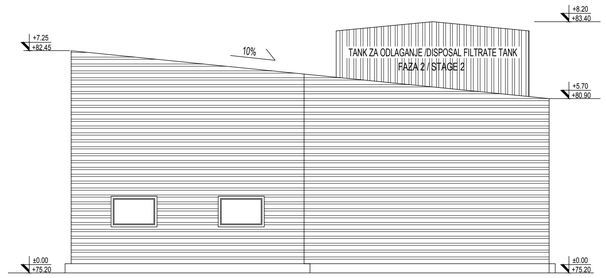

FASADA D / FACADE D

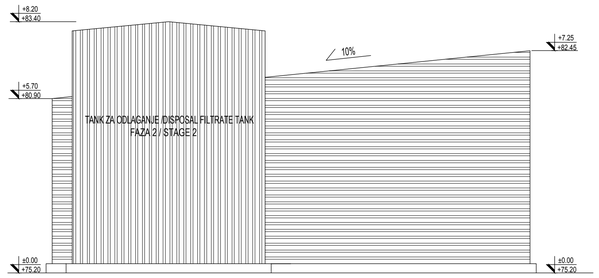

FASADA B / FACADE B

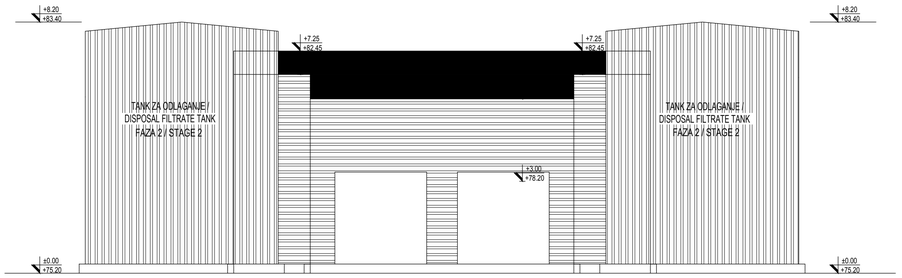

FASADA C / FACADE C

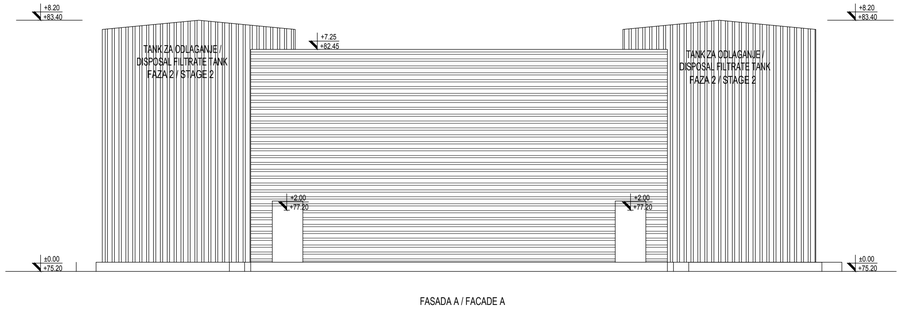

FASADA A / FACADE A

broj / No.	NAMENA PROSTORIJA / ROOMS	površina / area	obim / perimeter
		(m²)	(m')
OSNOVA PRIZEMLJA /GROUND FLOOR ±0.00			
PROSTORIJA REZERVOARA ZA ODLAGANJE GIPSA / ARRANGEMENT OF GYPSUM SLURRY DISPOSAL SYSTEM TANK AREA			
	NETO POVRŠINA PRIZEMLJA / NETO AREA GROUND FLOOR:	169.06	
	BRUTO POVRŠINA PRIZEMLJA / BRUTO AREA GROUND FLOOR:	176.63	
	BRGP / GBA:	176.63	
	POVRŠINA HORIZONTALNE PROJEKCIJE PLATOA / AREA HORIZONTAL PROJECTIONS OF THE PLATEAU:	432.00	

LEGENDA MATERIJALA: / LEGEND:

ARMIRANI BETON	REINFORCED CONCRETE
NABIJENI BETON	LEAN CONCRETE
MRŠAVI BETON /TAMPON/	LEAN CONCRETE
GITER BLOK	CLAY BLOCK
PUNA OPEKA	BRICK BLOCK
FASADNI I KROVNI PANEL	FACADES AND ROOF PANEL
MONTAŽNI PREGRADNI ZID OD GK PLOČA	PREFABRICATED WALL PANELS
TERMOIZOLACIJA	THERMAL INSOLATION
HIDROIZOLACIJA	HYDROISOLATION
ŠLJUNAK	GRAVEL
ČELIČNA KONSTRUKCIJA	STEEL CONSTRUCTION
OLUCI	CHAMFER
DROBLJENI KAMEN	GRAVEL
NABIJENA ZEMLJA	HUDDLE GROUND

REV.	Opis revizije / Revision description	Datum/Date	Crtao/Drawn	Overio/Appr.
1				
2				
3				
0/1				

Broj ugovora / Contract No :12.01.12625/52-17

Konzorcium: Consortium: MITSUBISHI HITACHI POWER SYSTEMS; ITOCHU; MITSUBISHI HITACHI POWER SYSTEMS EUROPE; Jedinstvo

delta inženjering
www.deltainzenjering.rs

Odg. projektant: Respon. designer: Ime i prezime / Name: Mirjana Lazić dipl.inž.arh. Potpis/Sign.
Licenca odg.proj.: Res. des. license: 300 4540 03
Vrsta teh. dok.: Project type: IDR - Idejno rešenje / IDR - Conceptual design
Datum: Date: 25.01.2018. Projekcija: Projection:
Deo projekta: Project part: Projekat arhitekture / Arhitectural Design

Investitor: Client: JP ELEKTROPRIVREDA SRBIJE / PE ELEKTROPRIVREDA SERBIA
Objekat: Complex: Postrojenje za ODG za TE Nikola Tesla A / FGD Construction Project for TPP Nikola Tesla
Postrojenje: Facility: Zona absorbera / Absorbers area
Deo postrojenja: Unit: C37-Zgrada za zgušnjavanje hidromešavine gipsa / C37-Gypsum slurry disposal system tank

Razmera: Scale: 1/100
Naziv crteža: Drawing name: Raspored prostorija rezervoara za odlaganje gipsa / Arrangement of gypsum slurry disposal system tank area
Crtež broj: Drawing number: NTFGD-S2.4-IDR-1.0.0-C37-001D-rev00
List/sl. Page/of: 1/1
Rev. 1

Ime fajla / File name: NTFGD-S2.4-IDR-1.0.0-C37-001D-rev00.dwg

DI-07 Rev. 2 - SR-TL